Flexible Strainers

The Right Connection®

Applications
- Used on the submerged end of the suction hose to prevent debris from entering the pump during operation
- Open or underground areas, roadways, mining, or any area affected by excess water where pumping is required

Sizes
- 2"
- Hose barb: 2"
- Hole: 8mm
- Width: 3-1/2"
- Length: 14.57"

Features
- Keeps your pumps running longer, saving you time and money
- Advanced flexible dewatering and filtration devices for harsh environments
- Designed to survive in hostile and high traffic environments
- Can withstand extreme conditions such as being run over by vehicles and machinery
- Costs less than conventional strainers, saving time in cleaning and replacements
- Vulcanised polymers eliminates sharp edges
- Lightweight and flexible design provides less impact when in contact with personnel or machinery
- Quick and easy to clean
- Protect the pump leading to less downtime, personnel intervention, and repair and maintenance

Material
- Elastomeric polymers

Specifications
- Flow rate: 224 GPM
- Minimum temperature: -87°F (-66°C)
- Maximum temperature: 212°F (100°C)

Approval
- Manufactured in accordance to ISO:9001

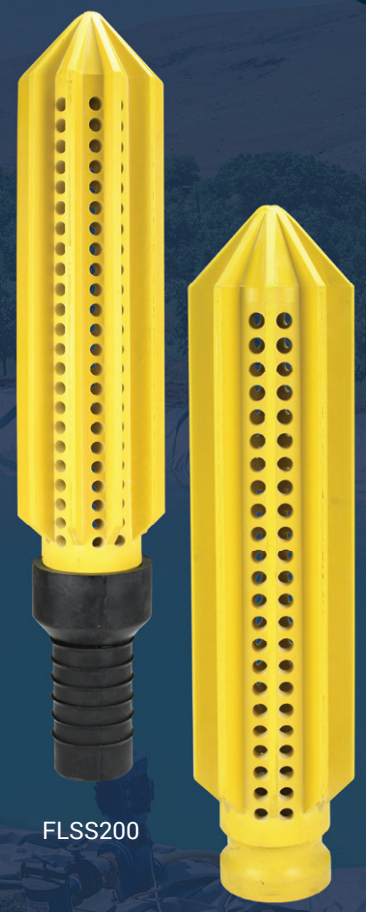

FLSS200

FLSS200-A

Description	Part #
flexible strainer	FLSS200
flexible strainer without hose barb	FLSS200-A

Dixon Group Canada Limited

2200 Logan Avenue
Winnipeg, MB R2R 0J2
ph: 877.963.4966
email: isales@dixonvalve.ca
canada.dixonvalve.com

The Right Connection®

Demonstration

Dimensions

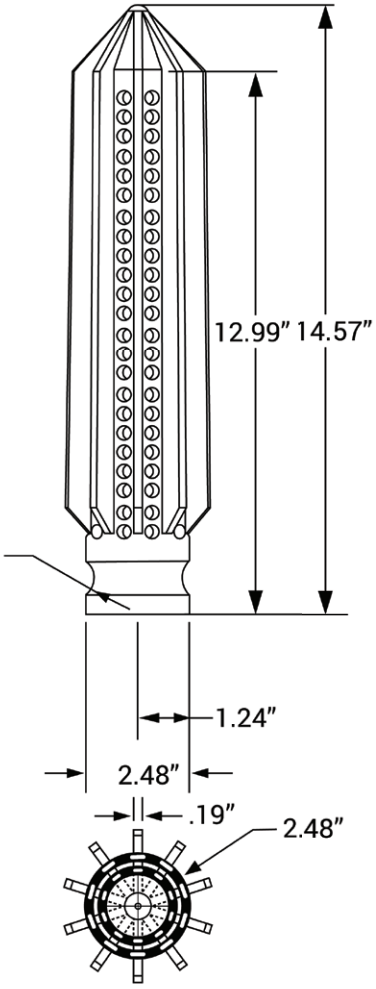

Applications

- Underground and open cut development areas affected by excess water
- Roadways subject to constant inundation with water
- Any mining areas with high levels of water affecting production
- The mining hose with flexible strainer is simply laid on the ground in the water affected zone and pumping may commence
- No steel parts, bore holes, or infrastructure needed from suction area to pump

© 2020 DGCL • FS_920