The Right Connection®

TVPC-Series Air & Vacuum Relief Tank Vent Valve

Engineered Product Reference Guide

canada.dixonvalve.com

Customer Service
877.963.4966

TVPC-Series Air and Vacuum Relief Tank Vent Valve

When filling or emptying a tank this valve is used to relieve pressure or vacuum. The stainless steel dome will help in preventing external contamination.

Application
- They are found mostly in winery and brewery markets.

Sizes
- 2" and 3"

Feature
- 2" and 3" clamp connections on same valve

Specifications
- Standard clamp connection
- Valve data:
  - Vacuum break: **2" water column (0.1 PSI)**
  - Pressure relief: **2" water column (0.1 PSI)**
  - Maximum tank fill and evacuation rate: **250 GPM**
  - Maximum operating temperature: **120°F (49°C)**
  - Minimum operating temperature: **40°F (4.4°C)**
- Materials of construction
  - Metal components: **304 stainless steel**
  - Other components: **PVC**

NOTE: This valve has been designed as a secondary pressure and vacuum relief vent. Always open upper manhole whenever product is being transferred in excess of **250 GPM**. Dixon Sanitary assumes no liability for tank damage or product loss. Designed for indoor use.

Part Number
TVPC200-300

TVPC-Series Air and Vacuum Relief Tank Vent Valve - Bill of Materials

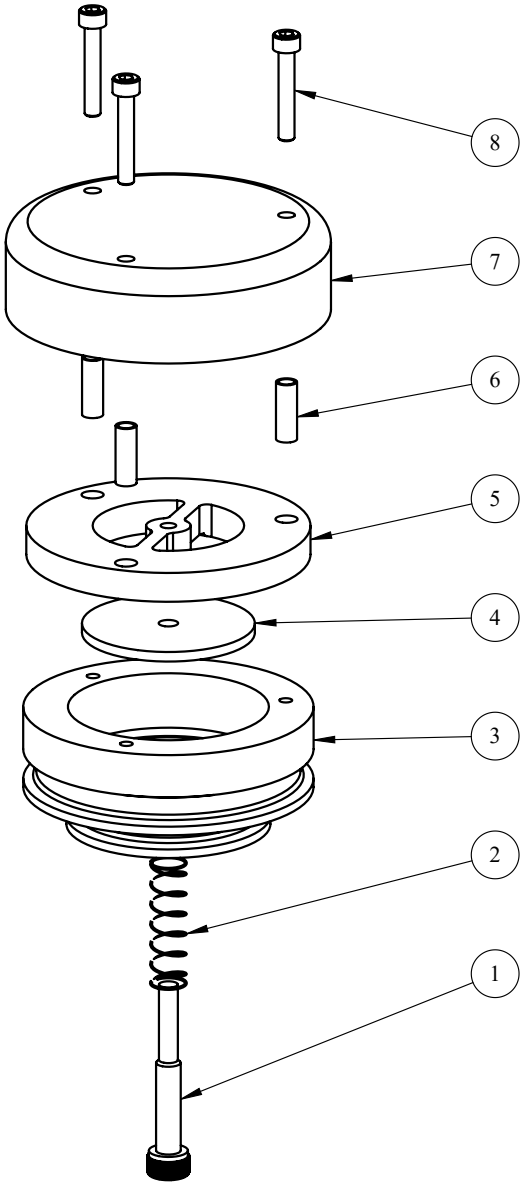

Item	Part #	Description	Material	Qty
1	TVPC-1	spring bolt	304 stainless steel	1
2	TVPC-2	spring	304 stainless steel	1
3	TVPC-3	body	PVC	1
4	TVPC-4	check plate	PVC	1
5	TVPC-5	flow plate	PVC	1
6	TVPC-6	spacer	304 stainless steel	3
7	TVPC-7	cap	304 stainless steel	1
8	TVPC-8	cap bolt	304 stainless steel	3

TVPC-Series Air and Vacuum Relief Tank Vent Valve - Dimensions

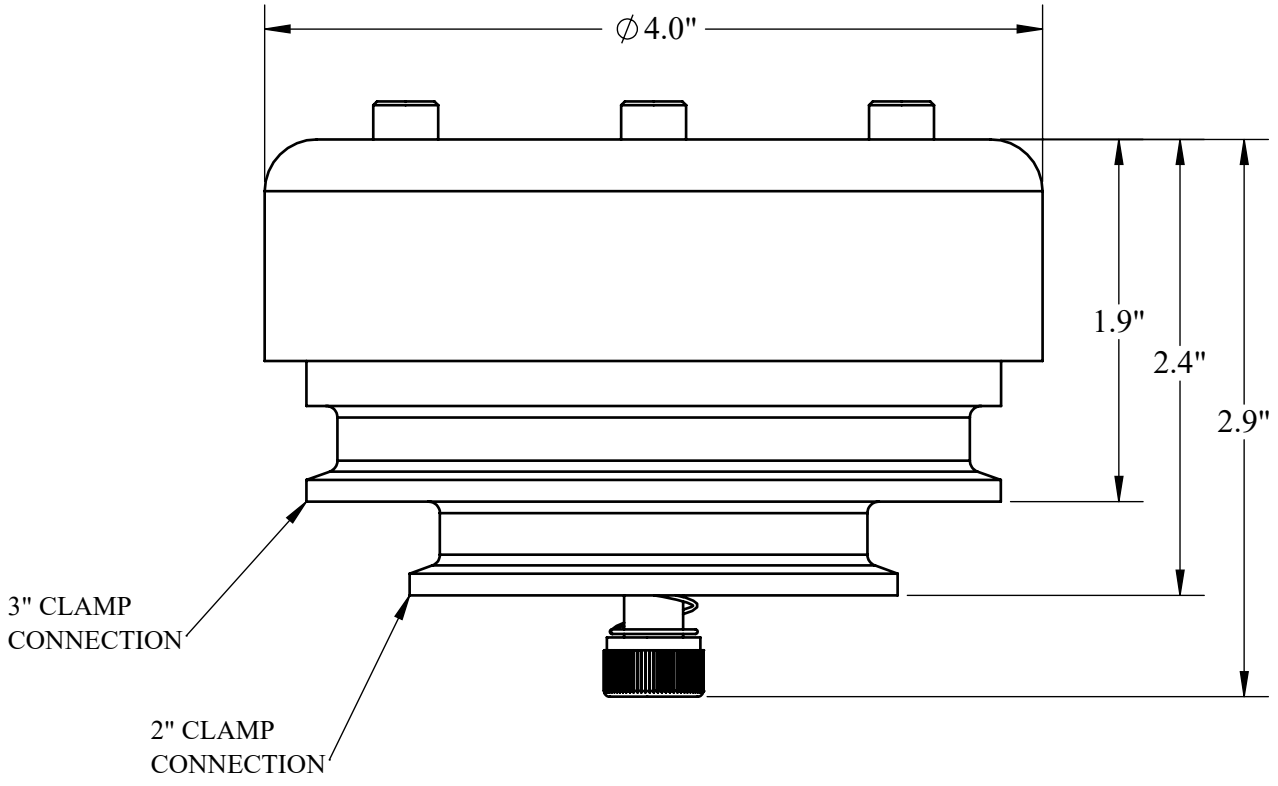

Notes

Limited Warranty

DIXON VALVE & COUPLING COMPANY, LLC (herein called "Dixon") warrants the products described herein and manufactured by Dixon to be free from defects in material and workmanship for a period of one (1) year from date of shipment by Dixon under normal use and service. Its sole obligation under this warranty being limited to repairing or replacing, as hereinafter provided, at its option any product found to Dixon's satisfaction to be defective upon examination by it, provided that such product shall be returned for inspection to Dixon's factory within three (3) months after discovery of the defect. The repair or replacement of defective products will be made without charge for parts or labor. This warranty shall not apply to: (a) parts or products not manufactured by Dixon, the warranty of such items being limited to the actual warranty extended to Dixon by its supplier; (b) any product that has been subject to abuse, negligence, accident, or misapplication; (c) any product altered or repaired by others than Dixon; and (d) normal maintenance services and the replacement of service items (such as washers, gaskets, and lubricants) made in connection with such services. To the extent permitted by law, this limited warranty shall extend only to the buyer and any other person reasonably expected to use or consume the goods who is injured in person by any breach of the warranty. No action may be brought against Dixon for an alleged breach of warranty unless such action is instituted within one (1) year from the date the cause of action accrues. This limited warranty shall be construed and enforced to the fullest extent allowable by applicable law.

Other than the obligation of Dixon set forth herein, Dixon disclaims all warranties, express or implied, including but not limited to any implied warranties of merchantability or fitness for a particular purpose, and any other obligation or liability. The foregoing constitutes Dixon's sole obligation with respect to damages, whether direct, incidental, or consequential, resulting from the use or performance of the product.

Some products and sizes may be discontinued when stock is depleted or may require a minimum quantity for ordering.

Limits of Liability

This brochure is intended as a product offering. It is not intended to be a user or technical manual. Information in this brochure is subject to change without notice. All users and distributors of products sold through this brochure should contact Dixon with questions of use, compatibilities, coupling procedures, and life of product. Our full-time engineering and test staff are always available to recommend uses and to assist distributors and users with any questions.

Safety

Safety logos, which appear throughout our catalog, are used as a reminder that the user should carefully review for the appropriateness of the product for the media, application, and environment in which it will be used.

NOTE: Because of the health hazards associated with contamination and lead content in drinking water systems, Dixon couplings, unless otherwise specifically approved, are not recommended for potable water service and should not be used in applications where drinking water will contact the wetted surfaces of the coupling.

All Dixon products are shipped in cartons with the following warning:
"**WARNING:** This product contains lead, a chemical known to the State of California to cause cancer and birth defects or other reproductive harm."

Trademark

Delrin® and Zytel® are registered trademarks of E.I. duPont Nemours and Company.

Kalrez® is a registered trademark of DuPont Dow Elastomers.

All other trademarks appearing in the Dixon illustrated product list are the property of their respective owners.

Copyright

Copyright © 2023 by Dixon Valve & Coupling Company, LLC

All rights reserved. This book is copyrighted material. Use, reproduction or copying of it by anyone other than Dixon® is strictly forbidden without its express written consent.

NOTE: Reasonable care has been taken in preparing this catalog. Dixon Valve & Coupling Company, LLC reserves the right to make corrections.

The Right Connection®

Dixon Group Canada Limited

2200 Logan Avenue
Winnipeg, MB R2R 0J2
Phone: 877.963.4966
Fax: 204.633.6119

connect with us on

© 2023 DVCC

Printed in Canada

DSEPRG2023_TVPC

Uncommon Excellence • Uncommon Excellence • Uncommon Excellence • Uncommon Excellence • Uncommon Excellence • Uncommon Excellence • Uncommon Excellence • Uncommon