Instruction & Operation Manual
for
JRZW-120 Wine Pump

Read and understand this manual prior to installing, operating or servicing this equipment.

DIXON

The Right Connection®

June 2019

Thank you for purchasing a Dixon Sanitary Product!

This manual contains installation, operation, disassembly and assembly instructions, maintenance procedures, troubleshooting and a complete parts list for all JRZW-Series positive displacement pumps.

READ THIS MANUAL carefully to learn how to service these pumps. Failure to do so could result in person injury or equipment damage.

Table of Contents

Safety 3

Care of Stainless Steel 4

Technical Specifications 5

Unpacking Installation & Start Up 6-15

Tools needed 16

Maintenance 16-25

- Pump Housing Disassembly 16-19
  - Single Mechanical Seal 16-19
- Inspection 20
- Seal Assembly 20
- Pump Housing Assembly 21
- Rotor Clearance 22
- Rotor Timing 23
- Gear Box Disassembly 24
- Gear Box Assembly 25
- Scheduled Maintenance 25

Dimensions 26

Troubleshooting 27-29

Repair Kits 30

BOM 30-36

Certificates 37

Warranty 39

Safety Information ⚠

DO'S & DON'TS

DO read and understand these instructions before installing or using the pump.

DO use Dixon® spare parts when replacing a component of the pump.

DO NOT service the pump while it is running.

DO NOT place the pump in an application where the service ratings are exceeded.

DO NOT modify the pump. Modifying the pump creates unsafe conditions and voids all warranties.

SAFETY PRECAUTIONS WHEN INSTALLING PUMP

DO use an authorized electrician when connecting the pump.

DO observe the mechanical limits of the pump (refer to the pump performance sheet).

DO install a throttling valve in the discharge line.

DO NOT install a throttling valve in the suction line.

SAFETY PRECAUTIONS WHEN OPERATING PUMP

DO allow only qualified personnel to operate this pump.

DO NOT start the pump until all personnel are clear.

DO NOT touch the pump or the lines when pumping hot fluids or when performing Clean In Place (CIP) procedures.

DO NOT run the pump with BOTH the suction inlet and discharge outlet blocked. Running the pump with the inlet blocked will cause serious damage to the pump.

DO NOT check pump rotation with liquid in the pump.

DO NOT run the pump with the front cover removed. The rotors and rotor case could be damaged or may cause severe injury.

DO NOT operate the pump with the safety guard removed.

SAFETY PRECAUTIONS WHEN SERVICING PUMP

DO ensure the pump is cool to touch before performing service.

DO relieve all pressure and drain all fluids from pump and connected piping before performing service.

DO ENSURE POWER TO THE UNIT HAS BEEN DISCONNECTED PRIOR TO PERFORMING ANY PUMP MAINTENANCE OR CLEANING.

DO exercise caution and wear protective clothing when using lye or acid for cleaning.

Care of Stainless Steel

The stainless steel components in Dixon Sanitary equipment are machined, welded and assembled by skilled craftsmen using manufacturing methods that preserve the corrosion-resistant quality of the stainless steel.

Retention of corrosion-resistant qualities under processing conditions requires regular attention to the precautions listed below.

1. Regularly check all electrical devices connected to the equipment for stray currents caused by improper grounding, damaged insulation or other defects. Corrosion: Pitting often occurs when stray currents come in contact with moist stainless steel.
2. Never leave rubber mats, fittings, wrenches, etc. in contact with stainless steel. Corrosion: Pitting or galvanic action. Objects retard complete drying, preventing air from reforming the protective oxide film. Galvanic corrosion occurs when two dissimilar metals touch when wet.
3. Immediately rinse equipment after use with warm water until the rinse water is clear. Clean the equipment (manual or CIP) as soon as possible after rinsing. Corrosion: discoloration, deposits, pitting. Product deposits often cause pitting beneath the particles.
4. Use only recommended cleaning compounds. Purchase chemicals from reputable and responsible chemical manufacturers familiar with stainless steel processing equipment, they continuously check the effects of their products on stainless steel.
5. Use cleaning chemicals exactly as specified by the manufacturer. Do not use excessive concentrations, temperatures or exposure times. Corrosion: Pitting, discoloration, stress cracks. Permanent damage often occurs from excessive chemical concentrations, temperatures or exposure times.
6. For manual cleaning, use only soft non-metallic brushes, sponges or pads. Brush with the grain on polished surfaces, avoid scratching the surface. Corrosion: Pitting, scratches. Metal brushes or sponges will scratch the surface and promote corrosion over a period of time. Metal particles allowed to remain on a stainless steel surface will cause pitting.
7. Use chemical bactericides exactly as prescribed by the chemical manufacturer in concurrence with local health authority. Use the lowest permissible concentration, temperature and exposure time possible. Flush immediately after bacterial treatment. In no case should the solution be in contact with stainless steel more then 20 minutes. Corrosion: Protective film destroyed. Chlorine and other halogen bactericides can destroy the protective film. A few degrees increase in temperature greatly increases chemical activity and accelerates corrosion.
8. Regularly inspect the joints in pipelines. Be sure all connections are tight fitting without binding. Corrosion: Crevice corrosion. Small crevices caused by improperly seated gaskets will promote crevice corrosion. Stainless steel under stress will develop stress cracking especially in the presence of bactericides containing chlorine.
9. Regularly inspect equipment for surface corrosion (i.e. pitting deposits, stress cracks, etc.). If deposit or color corrosion is detected, remove it immediately using mild scouring powder and detergents. Rinse thoroughly and allow to air dry. Review production and cleaning procedures to determine the cause. Note: If corrosion is not removed, the protective film cannot be restored and corrosion will continue at an accelerated rate.

JRZW 120 Wine Pump Technical Data

Specifications:

- Maximum Inlet Pressure: **14.5 PSI** (1 bar)
- Maximum Differential Pressure: **58 PSI** (4 bar)
- Maximum Flow Rate: 35 GPM Max
- Temperature Range: **23°F to 248°F (-5°C to 120°C)**
- Viscosity Range: Up to 100,000 cPs
- Noise Level: 60 ~ 80 dB

Materials:

- Product wetted steel part: AISI 316L Stainless Steel (standard)
- Heli-lobe rotors: EPDM
- Product wetted elastomers: EPDM (standard)
- Optional seals: Buna and FKM
- White epoxy painted cast iron gear box

Shaft Seals:

- Seal type: Single and Double Mechanical, Single O-ring and Triple Lip-seal
- Maximum flushing water pressure: **7 PSI** (0.5 bar)
- Flushing water consumption: 30~60 cubic inches/min (0.25~0.5 liter/min)
- Stationary seal ring material: Tungsten Carbide
- Rotating seal ring material: Tungsten Carbide (standard) or Silicon Carbide
- O-ring material: EPDM (standard)
- Lip-seal Material: PTFE(Polytetrafluoroethylene)

Optional Information:

- Thermal jacket on rotor housing and front cover
- Surface hardened rotor housing

Unpacking

Carefully unpack all parts of the pump and inspect for damage that may have occurred during shipment. Report any damages to the carrier immediately.

The ports on the pump are protected with a plastic cover. If any covers are missing or damaged, inspect the ports on the pump thoroughly for any damage.

If you are receiving a complete base mounted unit, please check shaft alignment as it may have changed during shipment.

The drawing below shows how the pump should be lifted. Ensure that the lifting equipment is correctly rated.

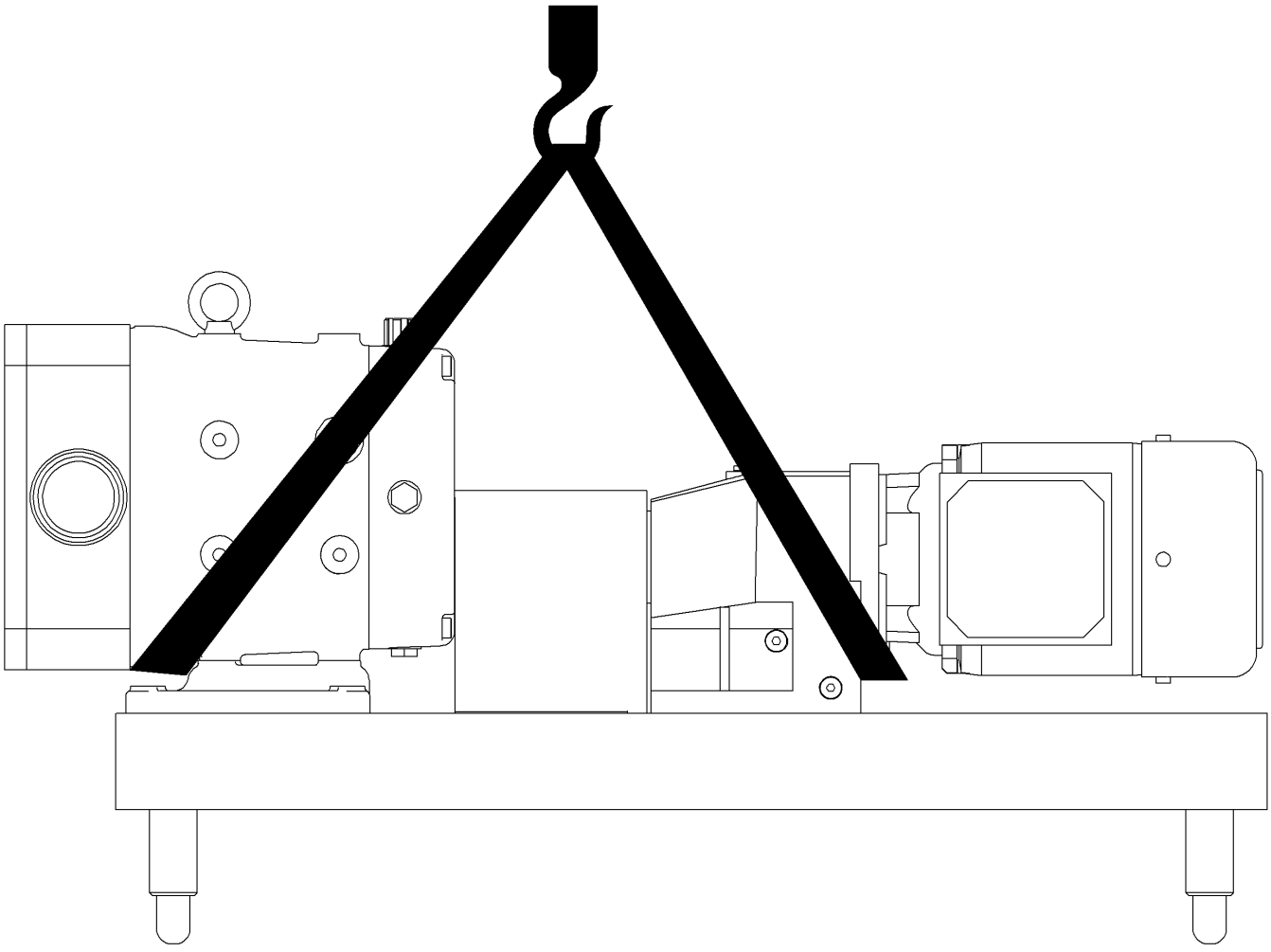

Installation & Start Up

Mounting Configurations

Pump Mounting Adjustable:

- Adjustable leg base, commonly used for sanitary pumps for wash down under base. Can be easily moved or repositioned.

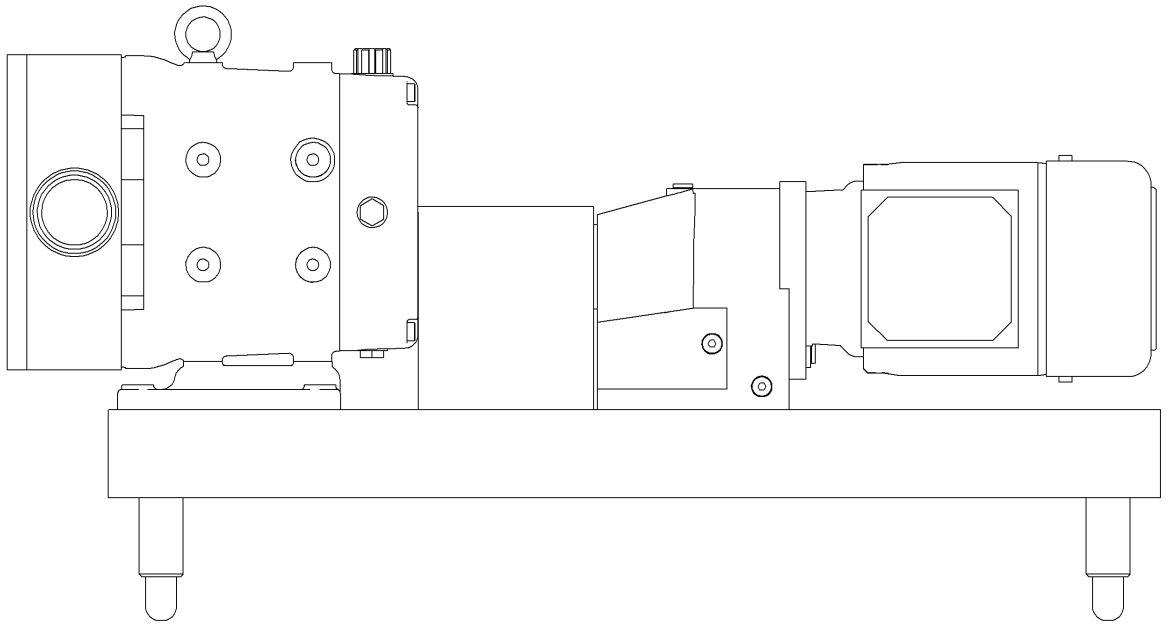

Pump Mounting Casters:

- Portable bases – for movement to different locations. Can also be mounted on a cart with handles.

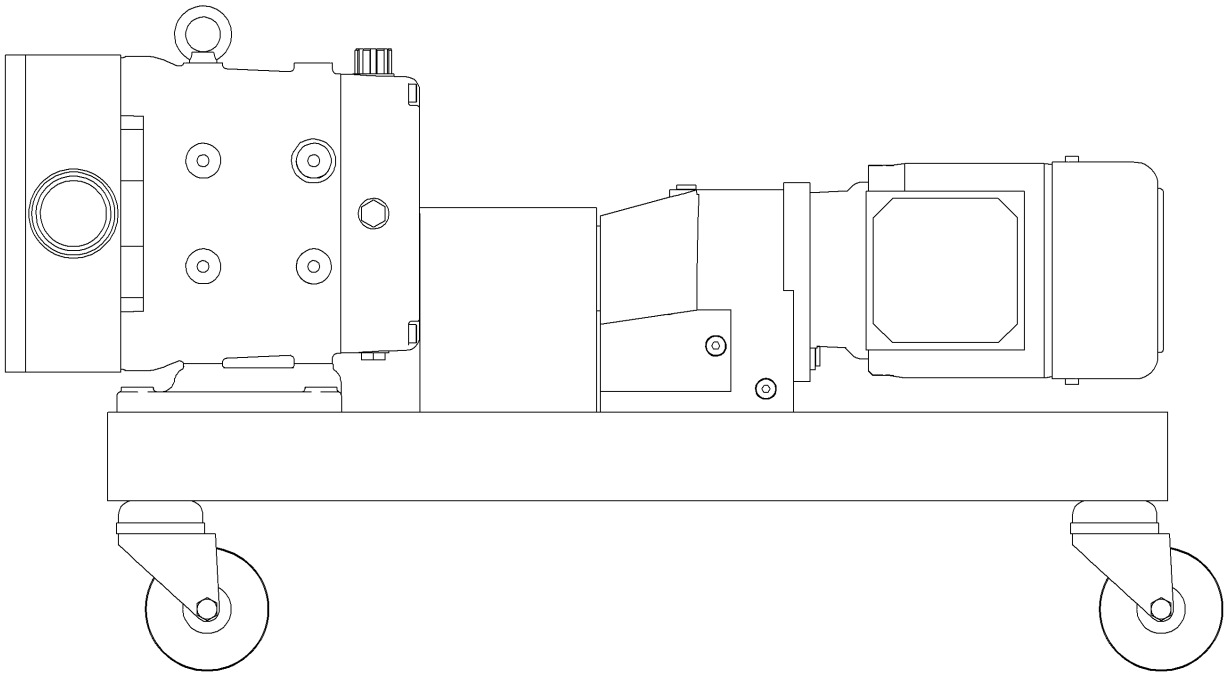

Installation & Start Up

Proper Installation

Piping Support:

- Weight of piping and fluid – support piping independently with hangers or pedestals. On rectangular inlet flange pumps, hopper should also be supported independently.

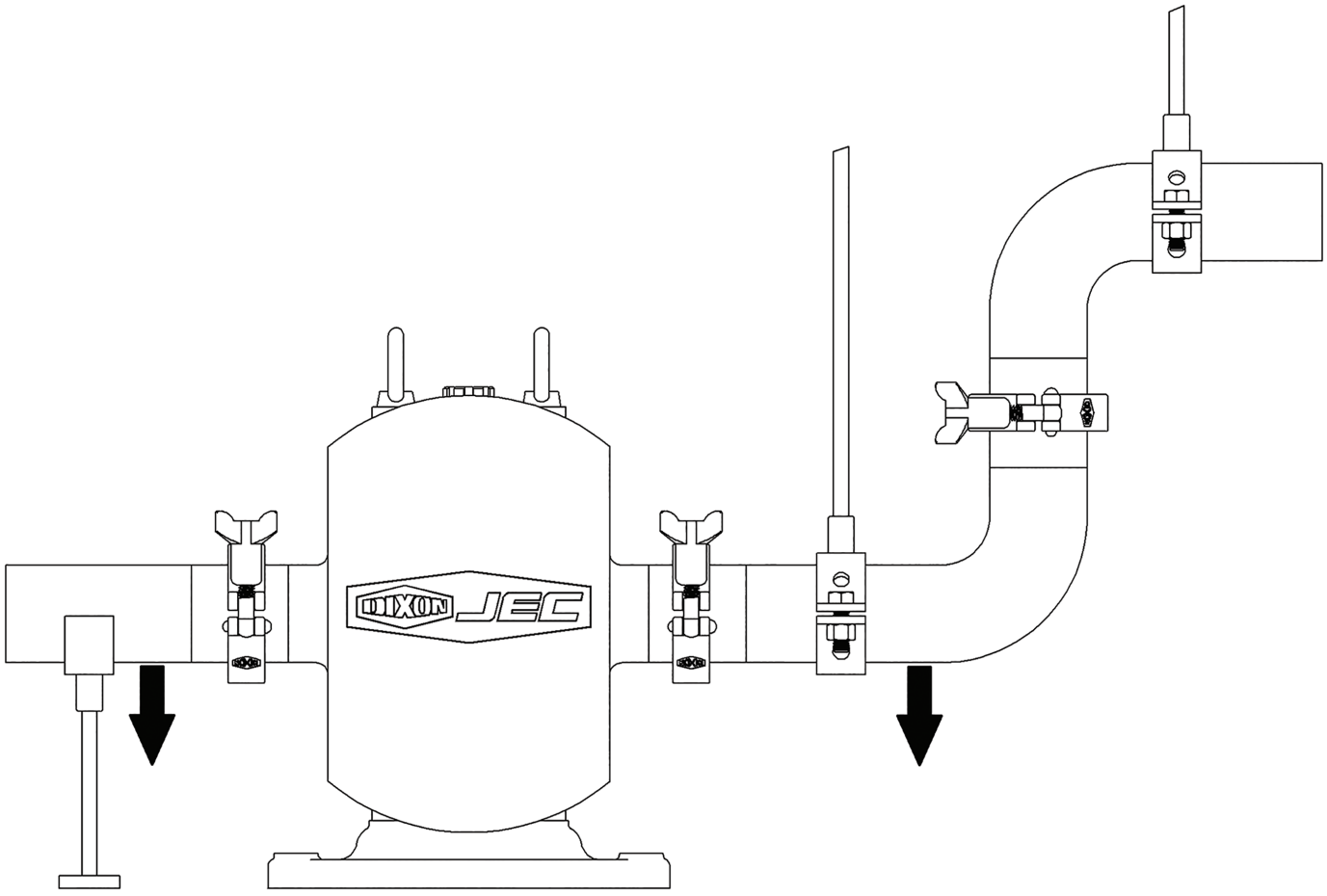

Installation & Start Up

Proper Installation (continued)

Piping Slope:

- Inlet side – slope piping up to inlet to avoid air pocket.

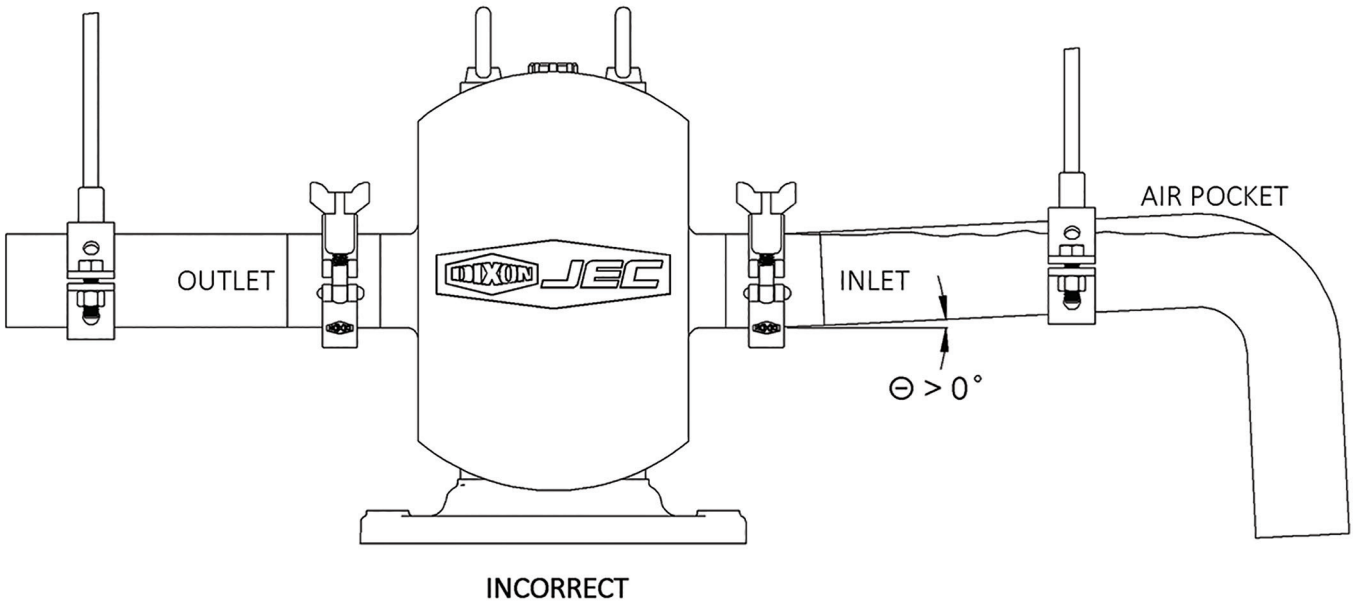

INCORRECT

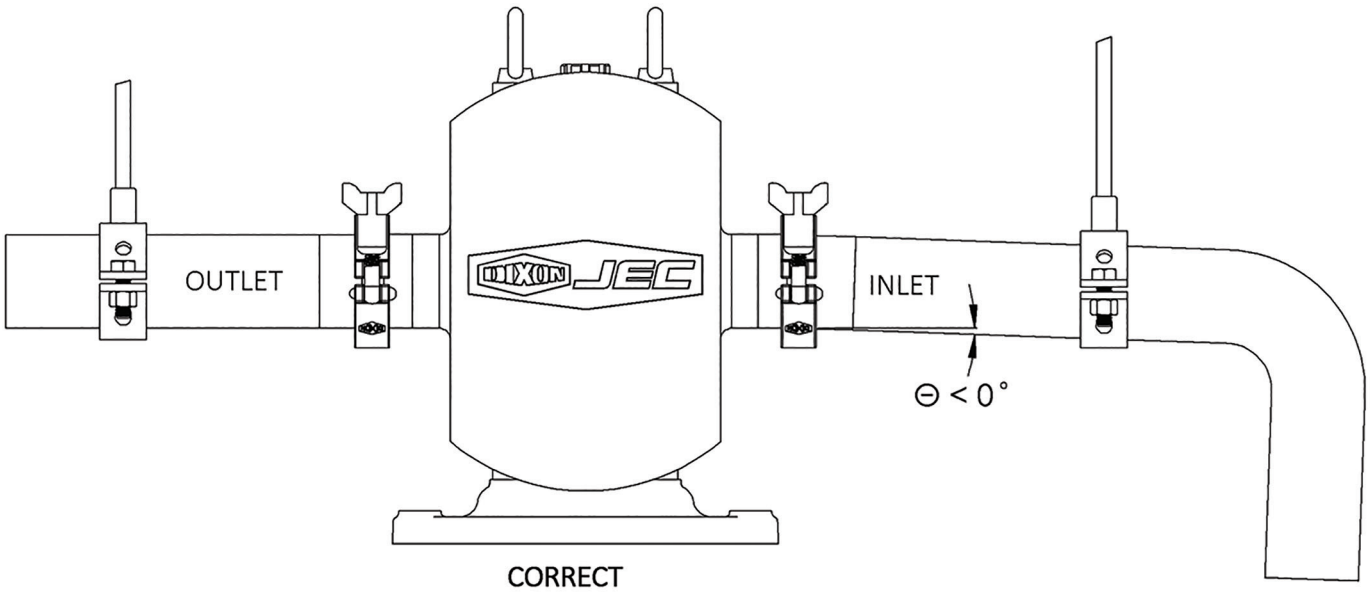

CORRECT

Installation & Start Up

Proper Installation (continued)

Pressure Gauges:

Pressure and vacuum gauges provide the easiest way to tell you something about the pump operation.

- Normal or abnormal pressures
- Overflow conditions
- Indication of flow
- Changes in pump condition
- Changes in system conditions
- Changes in fluid viscosity

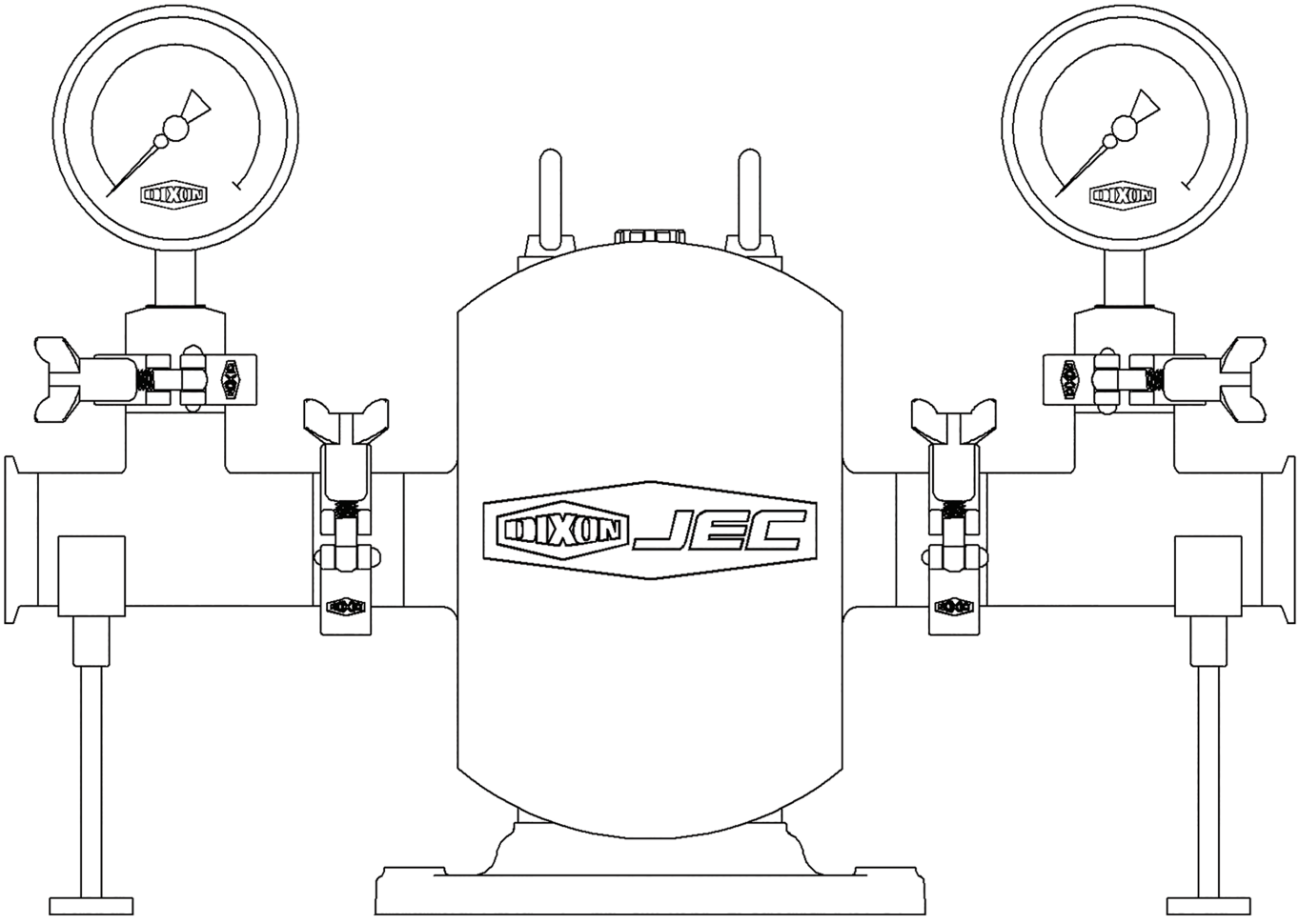

Installation & Start Up

Proper Installation (continued)

Inlet Check Valve:

- Inlet side – use check valves to keep inlet line full, particularly with low viscosity fluids, and in start-stop operation.

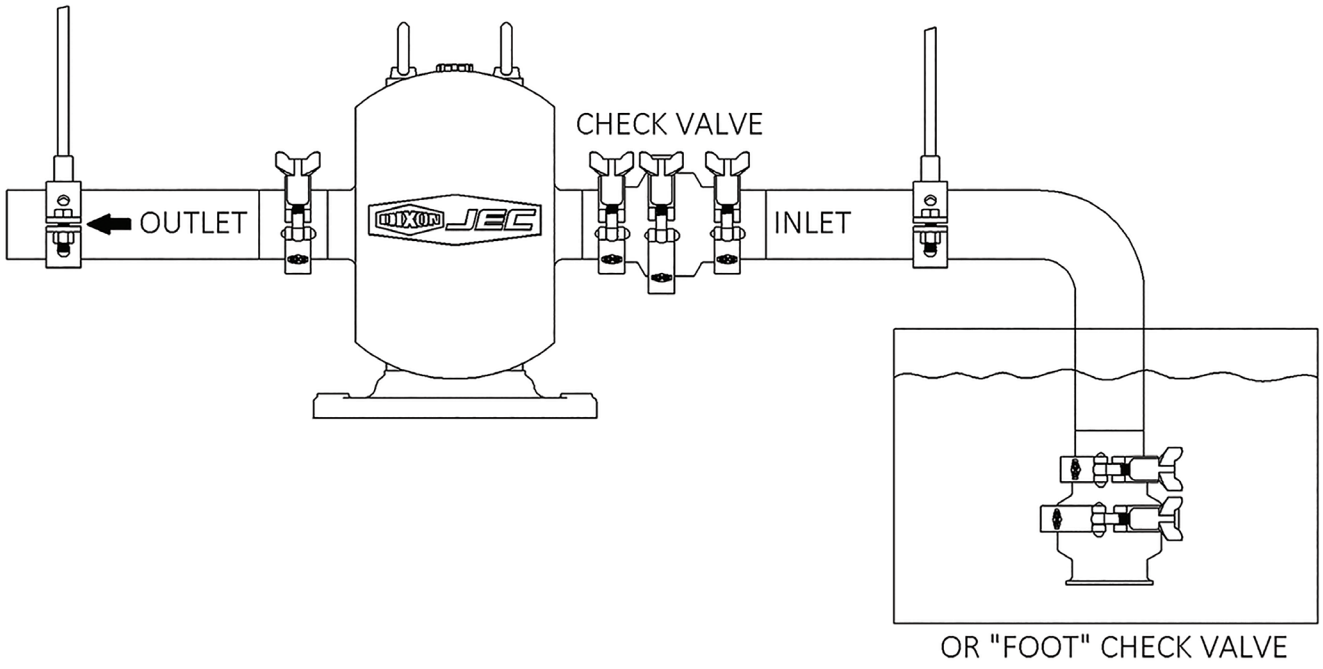

Outlet Check Valve:

- Inlet Vacuum Service – use check valve on outlet side.
- Prevents backflow (air or fluid)
- Facilitates initial start-up (minimizes differential pressure pump must supply to start flow)

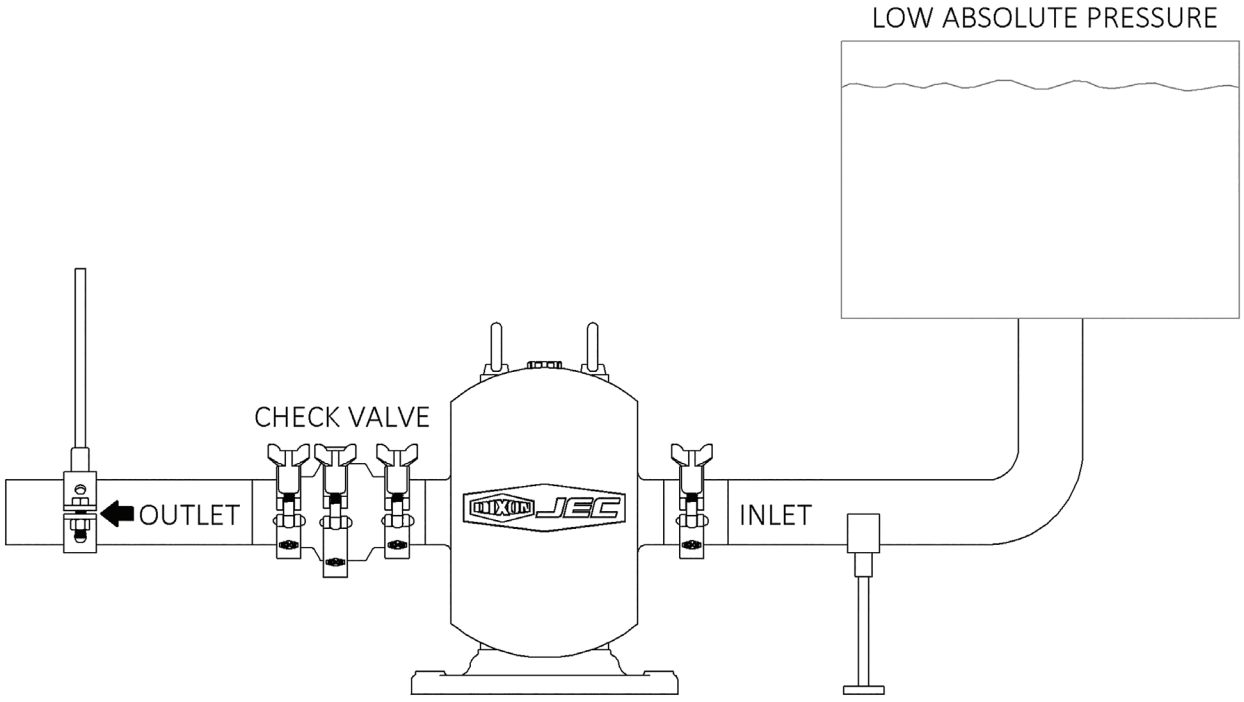

Installation & Start Up

Proper Installation (continued)

Thermal Expansion:

- Thermal expansion of piping can cause tremendous forces. Use thermal expansion joints to minimize forces on pump. Flexible joints can also be used to limit the transmission of mechanical vibration. Anchor free ends of any flexible hose in system.

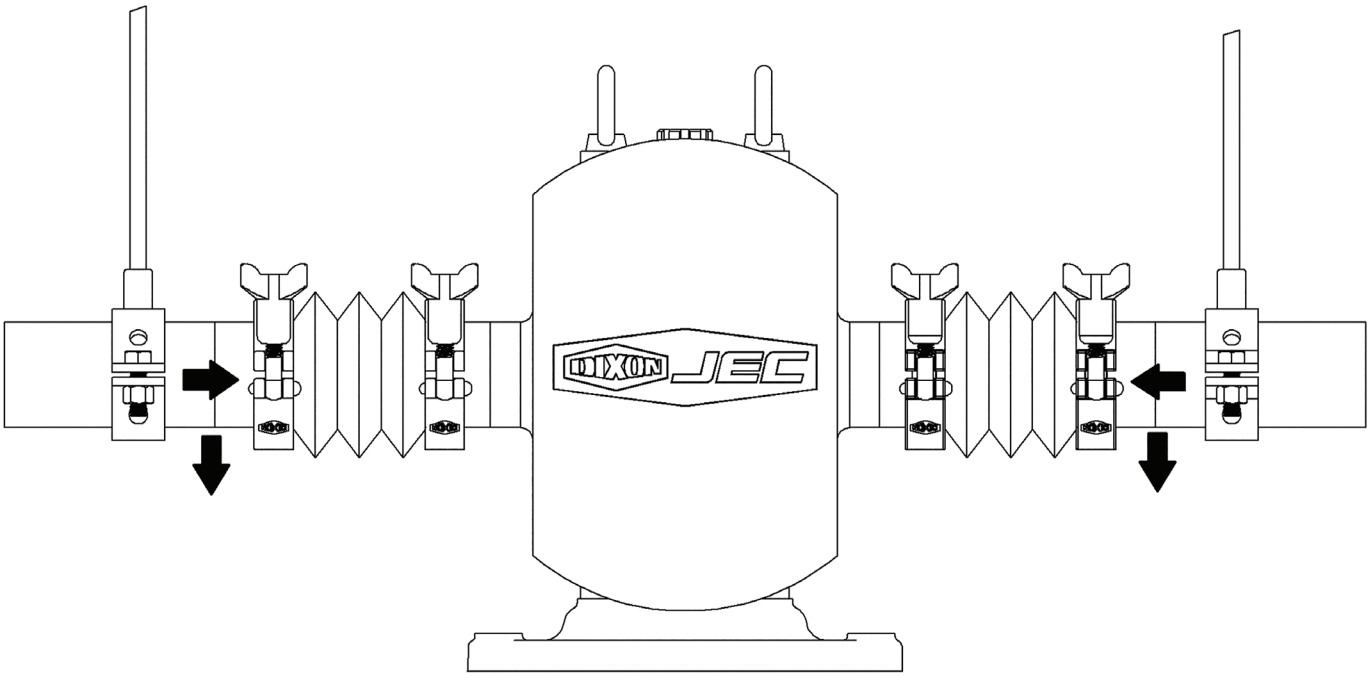

Isolation Valves:

- Isolation Valves – permit pump maintenance and removal safely without emptying entire system.

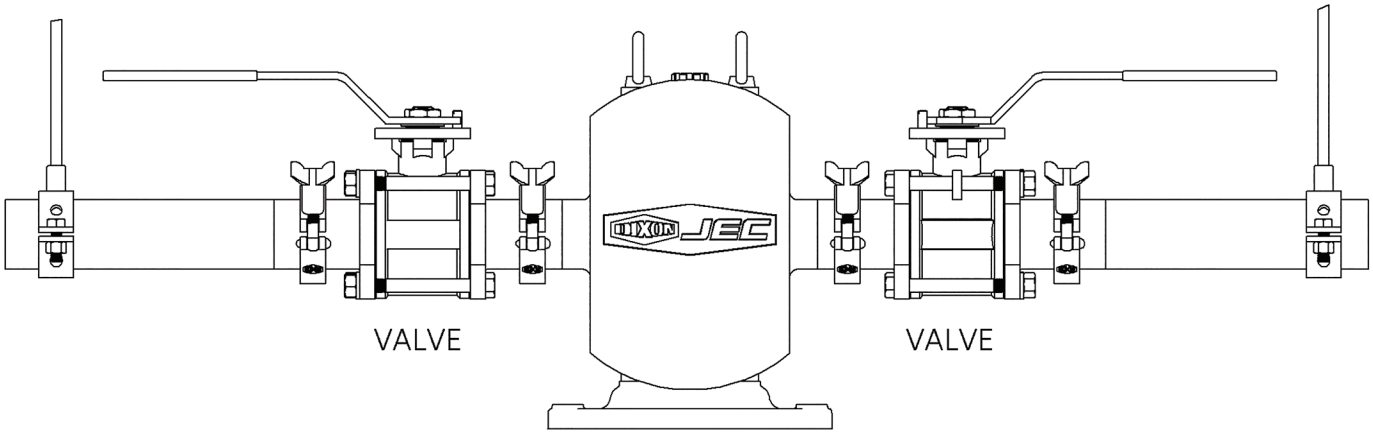

Relief Loop:

- Relief Valve – To protect the pump and piping system against excessive pressure, a relief valve should be installed. An integral relief valve, designed to bypass the fluid internally from the pump outlet to the inlet, should not be used on applications where the discharge must be closed for more than a few minutes. Prolonged operation of the pump with closed discharge with cause heating of the fluid circulating through the relief valve.

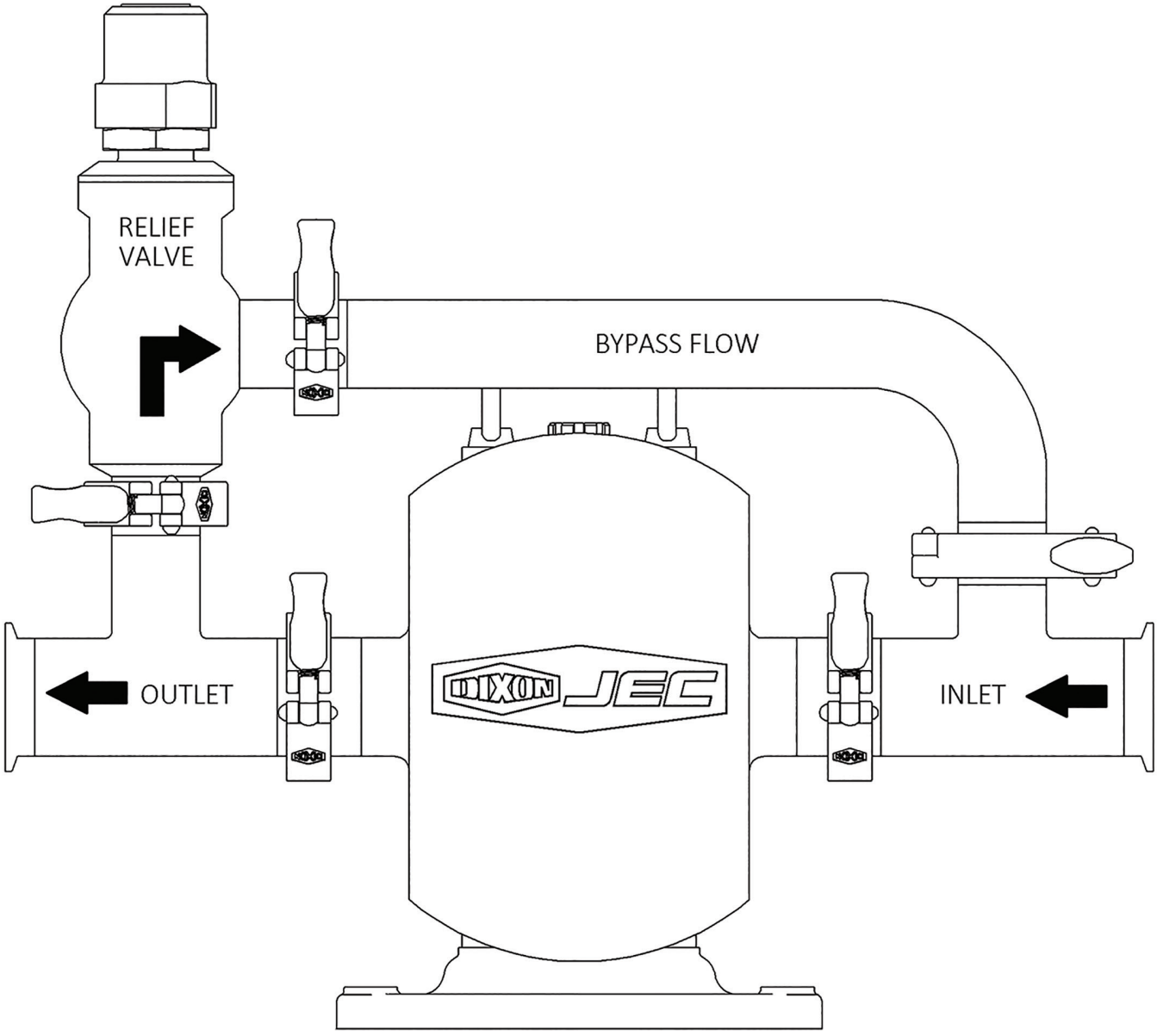

Installation & Start Up

At Start Up

Pump Flow:

- All pumps are labeled with flow direction based on motor being wired for clockwise rotation. If motor is wired for counterclockwise rotation, flow direction will be opposite of what is indicated on pump head.

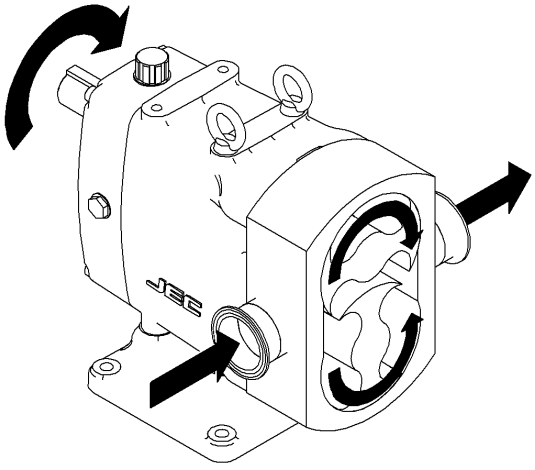

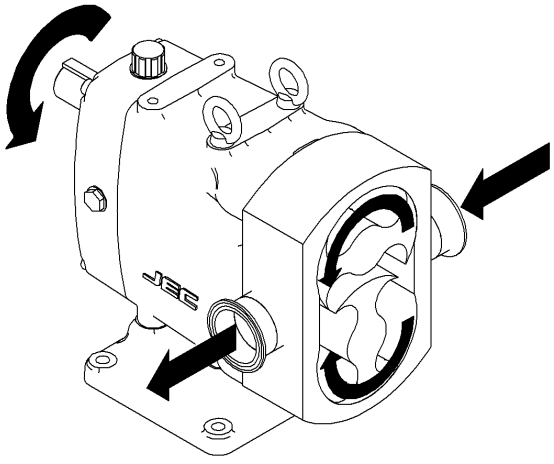

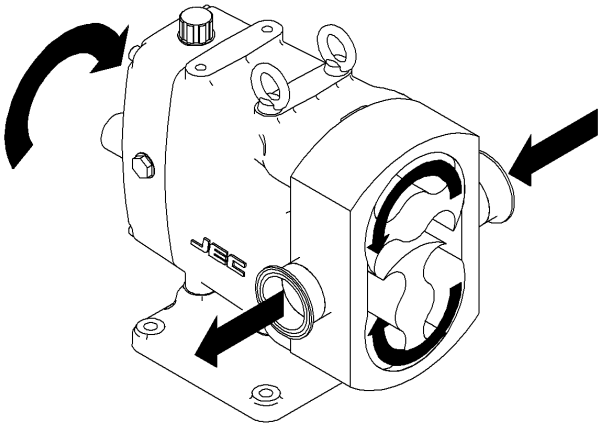

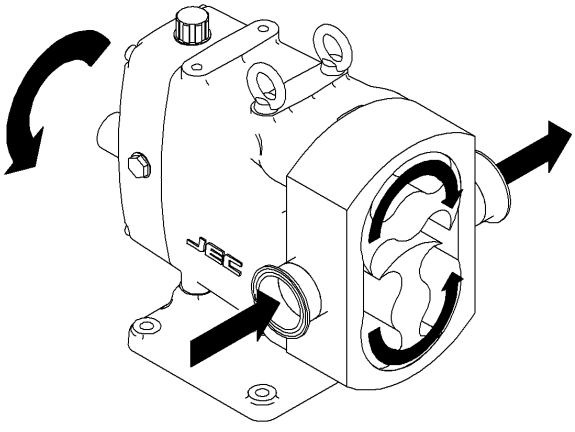

Installation & Start Up

At Start Up

Pump Alignment:

- A flexible coupling is used to compensate for end play and small differences in alignment. The pump and drive shaft should be aligned as closely as possible.
- Check angular alignment using feeler or taper gauge.
- Adjust to get equal dimension at all points – at the same time, set space between coupling halves to the coupling manufacturer's recommended distance.
- Note: Pump is aligned prior to shipping, after installation verify alignment as misalignment may have occurred during shipment.

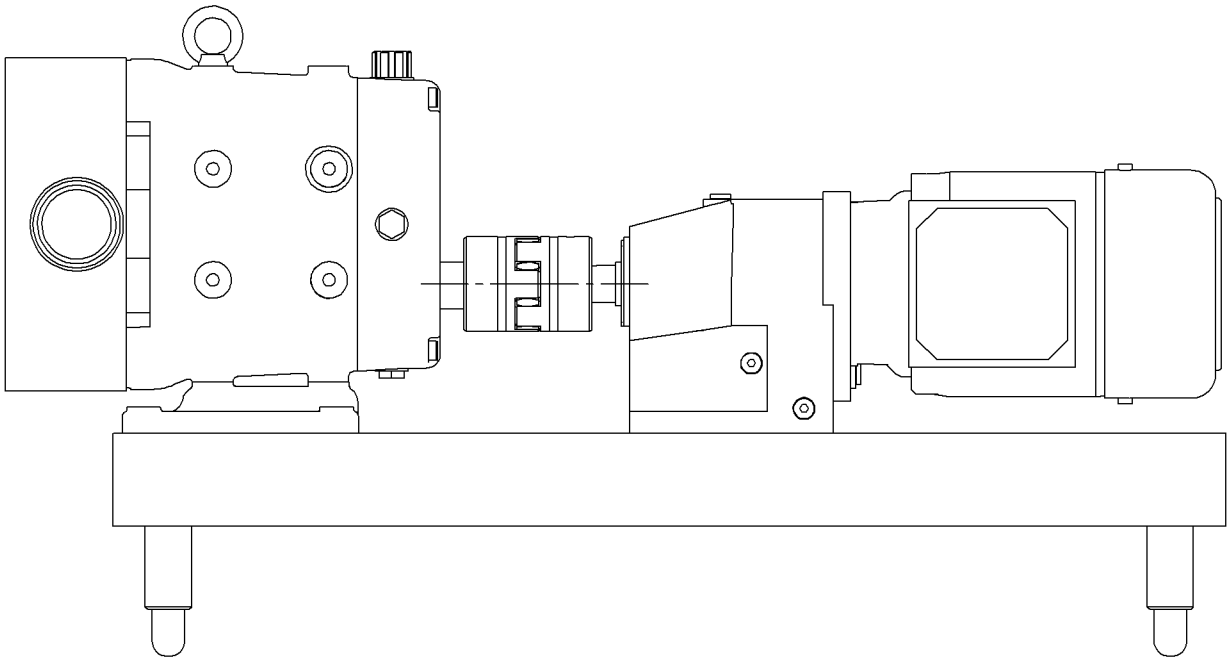

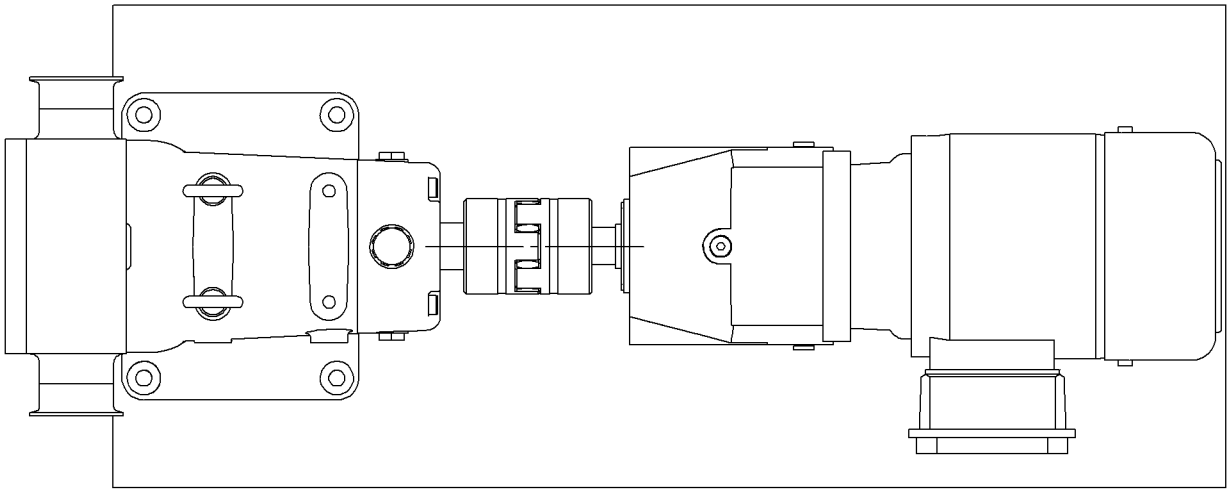

Tools Needed

- Rotor tool
- Plastic dowel
- Open ended wrench set
- Rubber mallet
- Flat head screw driver
- Feeler gauges
- Hex keys
- O-ring pick
- Spanner wrench
- Rotor extraction tool (optional)

Additional tools needed when assembling or disassembling gear box

- Spanner wrench
- Arbor press or bearing puller

Maintenance

Pump Housing Disassembly - Single Mechanical Seal

⚠ Prior to removal of pump, the shut-off valves in the suction and discharge pipe work must be closed. If there is any risk that product may be hardened, crystallized or frozen in the pump, it should be thoroughly drained and cleaned immediately after use. Similar attention must apply to the seal flush system. Remove power before servicing to prevent unintended start of the pump by an authorized electrician.

1. Loosen and remove the four wrench bolts (33) from the cover (32). Remove the cover. If it is stuck, tap on the cover with a soft hammer.

Maintenance

Pump Housing Disassembly - Single Mechanical Seal (continued)

2. Remove rotor retaining bolts (35). Use a wrench. To remove rotor retaining bolts, place a dowel between the rotors. Turn the first rotor bolt counter clockwise. Remove the rotor retaining bolts (35) and spring washers (36).

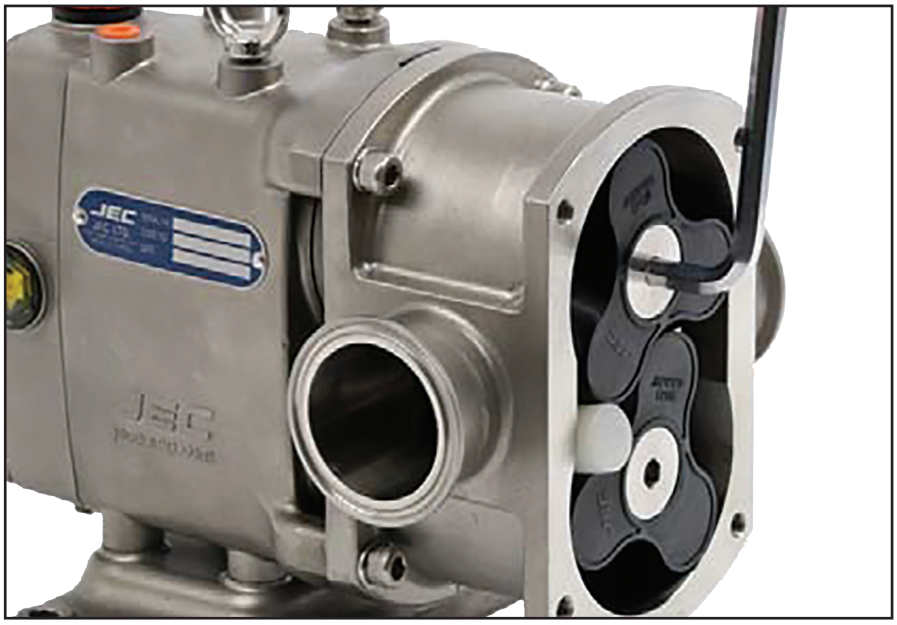

3. The rotors (38) can be removed from the pump housing (31) by pulling straight together with top and bottom. If the rotors are stuck tight, alternately tap on the back of the inlet and outlet ports with a soft hammer. Handle the rotors with care to avoid damage.

Maintenance

Pump Housing Disassembly - Single Mechanical Seal (continued)

4. To replace the seal ring (52) only, you can pull it off from the pump housing after removing the rotors without disassembling the pump housing. Simply push new seal rings in to the housing.

5. Remove pump housing (31) from the gear box (1A). If the housing is stuck, alternately tap on the back of the inlet and outlet ports with a soft hammer.

Please handle the shims (45) with care to avoid being lost or damaged when assembling or disassembling the pump. Do not mix shims top and bottom.

Pump Housing Disassembly - Single Mechanical Seal (continued)

6. The seal ring (52-1) can be easily removed from the rotor (38). Use a small screw driver or a pick as shown. Please keep the O-ring (52-2) on the rotor.

Maintenance

Inspection

1. Inspect O-rings and seals for reuse. Worn O-rings and seals should be replaced.
2. Inspect seal faces for scoring or cracks. Replace any seal faces that are damaged.
3. Inspect rotors for any damage or abnormal wear.
4. Inspect rotors for wear on splines and that they fit snuggly on the shafts.
5. Inspect shafts for wear on splines and make sure they are not loose in the gear case.
6. Inspect burr of the rotor bolt groove. Must be removed or replaced.

Seal Assembly

Inspect each piece of your seal replacement kit for damage before installing them.

Place the pump housing face down on a table, put new seal in to the pump housing and tighten bolts with a wrench.

Maintenance

Pump Housing Assembly

Before installing the pump housing (31) to the gearbox make sure that the surface of the pump hosing and gear box are clean and check the shim plate between pump housing and gear box. Install the pump housing (31) onto the gear box (1A) and secure the four housing set nuts (44).

When installing the ceramic shaft sleeve (57) onto the pump shaft, align sleeve with fit pin.

Follow the disassembly instructions in reverse for all types of seals and rotor assembly.

Assemble a rotor (38) onto shaft engaging the shallow groove with small spline in rotor and seal side first in to the shaft.

Place a dowel between the rotors (38). Tighten the first rotor bolt with a wrench. To tighten the second rotor place a dowel on the opposite side of the rotor and tighten the second rotor bolt.

Maintenance

Rotor Clearance

Rotor clearance must be precisely maintained to provide maximum pumping efficiency, yet prevent contact between rotors, rotor housing, and front cover during operation. If pumping efficiency is below expectations, or if parts contact has occurred during operation (within rated differential pressure) check rotor clearances and adjust if incorrect.

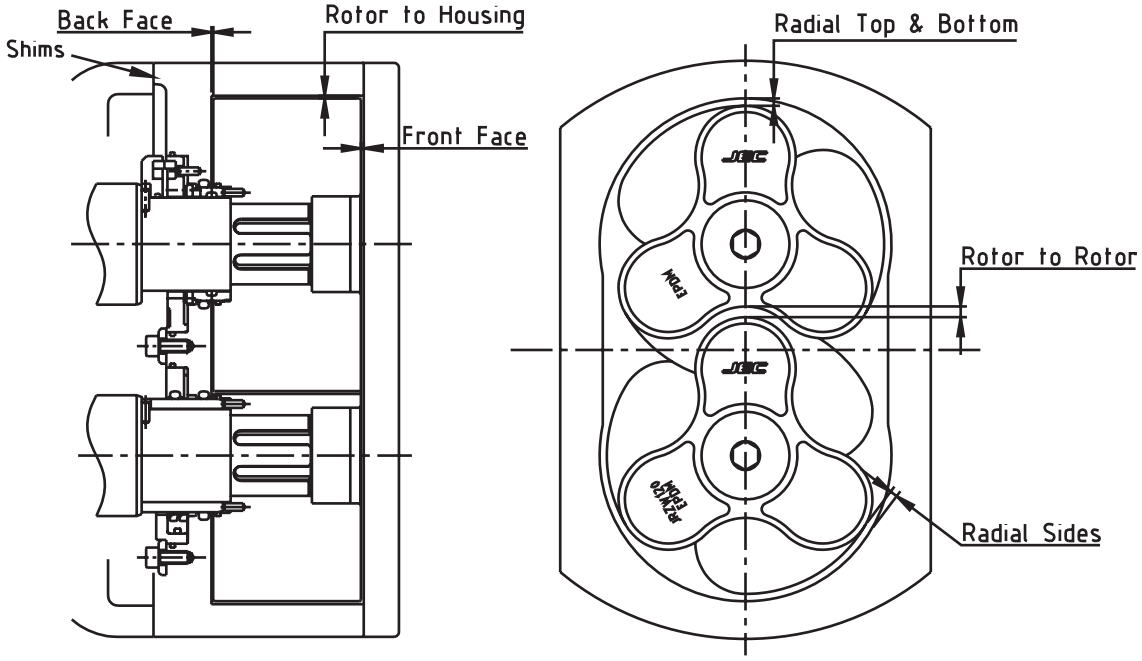

Standard Rotor Clearances (mm)

Model	Back Face	Front Face	Radial Sides	Radial Top & Bottom	Rotor to Rotor
JRZW-120	0.05/0.002	0.05/0.002	0.05/0.002	0.05/0.002	0.05/0.002

There are two areas of rotor clearances as illustrated following:

- Rotor tip clearance – not adjustable set by manufacturer
- Front and back face clearance – adjustable by shim

Rotor width and body depth are fixed at manufacture. Therefore, with the correct rotor size selected, the only maintenance adjustment that can be made is the proportion of front and rear clearance. Measure the front clearance as follows:

1. The rotor to rotor housing back face clearance is maintained by the shim (45).
2. Check that the rotor housing is tight to gearbox (1A) and check the rotor bolts (35) are tight.
3. Measure the clearance between the back face of the pump housing and the back of the rotor with a feeler gauge. Check the reading with the recommended back face clearance.
4. If incorrect, adjust by adding or removing shim plates (45) from behind the pump housing.
5. Check each rotor and adjust as necessary.

Maintenance

Rotor Timing

Rotor timing must be precisely maintained to provide maximum pumping efficiency, prevent contact between rotors during operation. If pumping efficiency is below expectations or if rotors contact during operation (within rated differential pressure), check rotor timing and adjust if incorrect. Also check rotor timing after any gearbox dismantling when the gears are removed and/or replaced.

Check Rotor timing as follows:

1. Assemble each rotor in its normal location on the drive shaft and the idle shaft. Assemble each rotor bolt and tighten hand tight.

2. Rotate the shafts 30 degrees and measure gap as illustrated by arrows. Rotate the shafts 60 degrees the opposite direction and measure gap as illustrated.

3. The rotors are correctly timed when the gap measured at both locations are equal. If the gap is unequal, adjust the timing as follows.

4. Rotor timing is determined by the relative location of the two helical gears (14) on the shafts. Gear spacers (16) are used to adjust the location and the timing. When adjusting timing, move only one of the two gears.

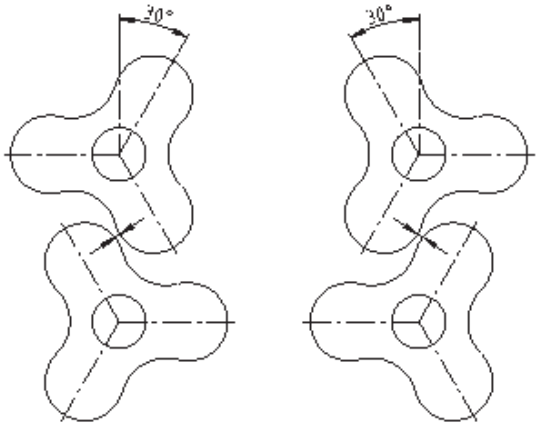

5. Place the wooden dowel between the rotors.

6. Bend away the tab of the lock washer (12) on one shaft. Loosen the lock nut and temporarily insert shim stock between the gear and gear spacer. Tighten the lock nut, reassemble the rotor in its correct location, and recheck rotor timing.
   - If rotor timing is correct, remove the gear and replace added other spacer or add a shim equal in thickness to the shim stock temporarily added. Reassemble the gear and gear nut, tighten to the correct torque, and check rotor timing again to confirm that it is correct.
   - If rotor timing is incorrect, but closer to equal than original measurement, repeat previous step adding additional shim stock.
   - If rotor timing is incorrect and more unequal than original measurement, remove temporary shim stock from one shaft and add instead to the other shaft.

7. Repeat above procedures until the timing gap is equal after gear spacers are in place and gear nuts are tightened to correct torque.

8. Reassemble pump.

Maintenance

Gearbox Disassembly

1. Remove the oil drain plug (15) and drain the oil.

2. Remove the key (7) and gear box cover bolts (6) from the rear cover (4).

3. Pull the rear cover off the drive shaft extension. If the cover is stuck use a soft hammer carefully to loosen it. Heavy hitting the hammer may cause damage to rear cover (4) and dowel (15).

4. Remove the rear cover oil seal (11) from the rear cover.

5. Remove the paper gasket (26) from the rear cover or gear box.

6. Straighten the locking tab of the bearing lock washer (12). Reinstall the rotors (38) on the drive (8) and idle (9) shafts. Lock the rotor with a plastic dowel. Remove the lock nut (12-1) and lock nut washer from the drive shaft (8) and idle shaft (9).

7. Pull the two helical-gears (14) off the pump shafts. Remove the gear keys (7).

8. Remove the front bearing gland set bolts (23).

9. Place the gearbox (1), wet end (rotor side) down, on an arbor press.

10. Protect the shaft ends with a wood block and press the drive and idle shaft out of the gearbox.

11. Remove the bearings (17) and spacers (18) together by pressing them out from the shafts.

12. Or remove bearings by puller.

Maintenance

Gearbox Assembly

1. Clean and lubricate the front and rear bearing areas of the drive and idle shafts with oil.
2. Fit the front bearing, spacer and rear bearing on the shaft by arbor press or heat 120C (250F) up by heater.
3. Lubricate and install the front bearing oil seals (22) in to the bearing gland.
4. Position the gearbox (1) with wet end up.
5. Clean and lubricate the front and rear bearing areas with oil.
6. Insert the shaft perpendicularly to the gearbox properly. There should be a tight sliding fit between the gearbox and the bearing outer rings. Press or soft hammer could be used.
7. Place the front bearing gland set bolt and washer and tightened.
8. Lubricate and install the rear oil seal cover (24) into gear box (1).
9. Place the gear spacer (16) over the shafts.
10. Clean and lubricate the gear area of the shaft and the face of the lock washer with oil.
11. Position both shaft gear keys (7) to the 12:00 position.
12. Place the gear, lock washer (12) and lock nut (12-1) onto the shafts and hand tighten.
13. After the gears are installed, turn the shafts to make sure they turn freely and that the rotors (38) are timed correctly. (rotor alignments are required)
14. Use a spanner wrench to tighten the gear lock nut on the drive shaft. You can install the rotors to hold the shafts in place while you tighten the nut.
15. Tighten the locknut (12) on the idle shaft, following the previous steps.
16. Install the paper gasket to rear cover (26) and mount the rear cover assembly over the drive shaft extension onto the gearbox.
17. Set the cover bolts, oil window and pressure relieve valve.
18. Fill the oil reservoir with oil to the middle of the oil window.

Scheduled Maintenance

- Every two years, change oil seals
- Change oil every 2,000 operating hours

Recommended Spare Parts:

- 1 Year – (2) Seal sets and (1) O-ring set and (1) set rotors
- 2 Years – (4) Seal sets and (2) O-ring sets and (1) set rotors

Dimensional Drawing

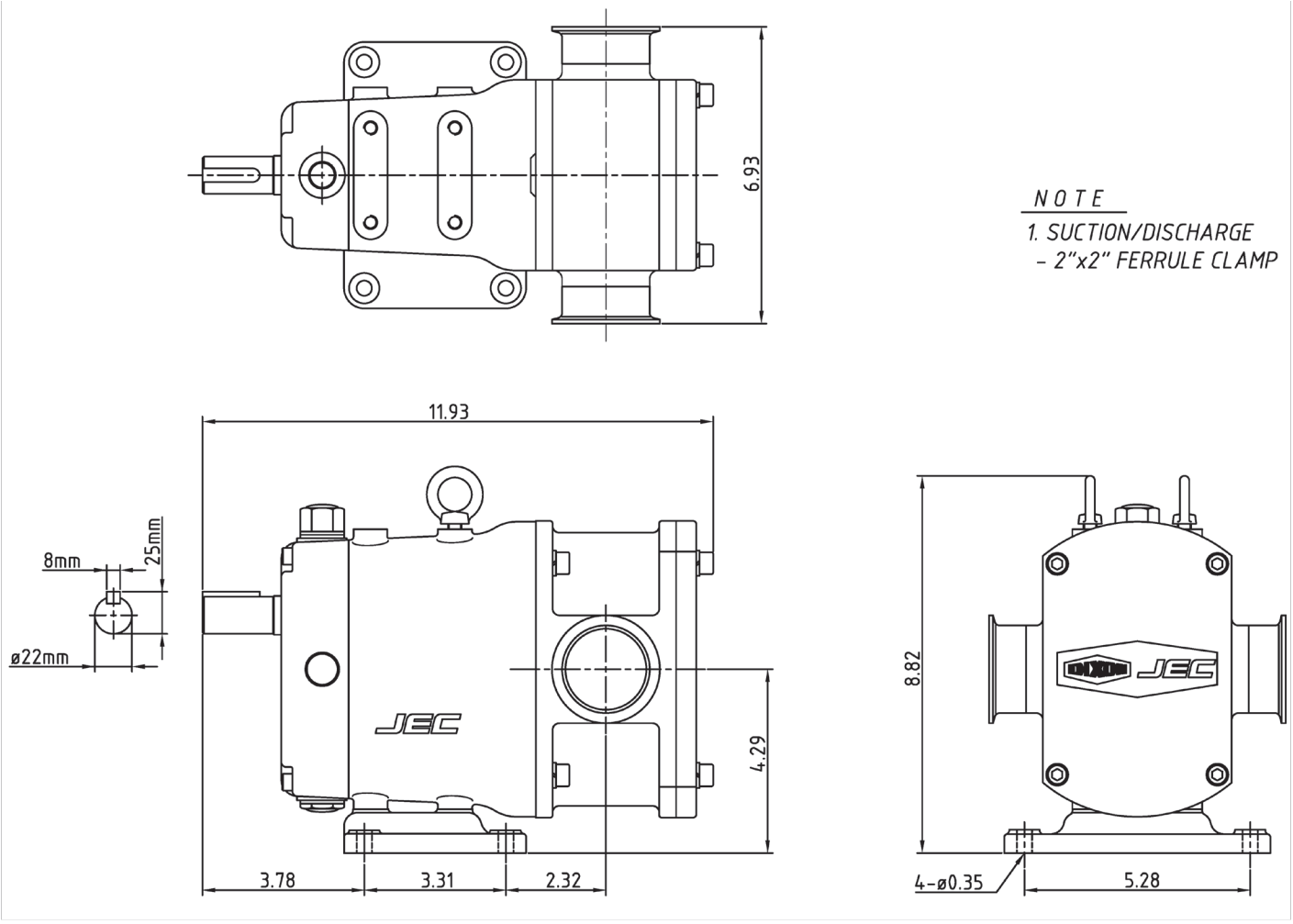

Troubleshooting

Problem	Possible Cause	Suggested Action
No Flow, Pump Rotors Are Not Turning	Drive motor not running.	Check resets, fuses, circuit breakers.
	Key sheared or missing.	Replace.
	Drive belts, power transmission components slipping or broken.	Replace or adjust.
	Pump shaft, keys or gears sheared.	Inspect and replace parts as necessary.
No Flow, Pump Rotors Are Turning	Rotors turning in the wrong direction.	Check motor hookup to reverse motor rotation.
	Relief valve not properly adjusted or held open by foreign material.	Adjust or clear valve.
	Suction port is blocked, not allowing flow to the pump.	Check all inlet valves, strainers and tank outlet ports.
No Flow, Pump Not Priming	Valve closed in inlet line.	Open valve.
	Inlet line clogged or restricted.	Clear line, clean filters, etc.
	Air leaks due to bad gaskets or pipe connections.	Replace gaskets, check lines for leakage (can be done by air pressure or by filing with liquid and pressurizing with air.
	Pump speed too slow.	Increase pump speed.
	Pump speed to fast for high viscosity liquid.	Decrease pump speed.
	Liquid drains or siphons from system during off periods.	Use foot valve or check valves. Filling inlet lines with material before startup may solve startup priming problems due to no material in system.
	"Air" lock caused by fluids which "gas off" or vaporize or allow gas to come out of material during off periods.	Install and use a manual or automatic air bleed from pump or lines near pump.
	Extra clearance rotors, worn pump.	Increase pump speed within limits, use foot valve to improve priming.
		Replace worn rotors.
	NPSHA too low.	Check net inlet pressure available against net inlet pressure required. Change inlet system as needed.
	On "Vacuum" inlet system: On initial start-up, atmospheric "blow back" prevents pump from developing enough differential pressure to start flow.	Install check valve in discharge line.
Insufficient Flow	Speed too low or too high to obtain desired flow.	Check curve and adjust as necessary.
	Air leak due to bad seals, pipe connections or other equipment.	Replace seals, check inlet fittings.
Insufficient Flow – Flow Being Bypassed Somewhere	Flow diverted in branch line, open valve, etc.	Check system and controls.
	Relief valve not adjusted or jammed.	Clear or adjust valve.
Insufficient Flow – High Slip	Hot (HC) or extra clearance rotors being used on "cold" fluid and/or low viscosity fluid.	Replace with standard clearance rotors.
	Worn pump.	Increase pump speed (within limits).
		Replace rotors
	High pressure.	Reduce pressure by adjusting system settings or hardware.

Troubleshooting

Problem	Possible Cause	Suggested Action
Cavitation	Strainers, foot valves, inlet fittings or lines clogged.	Clear lines. If problem continues, inlet system may require changing.
	Inlet line size too small, inlet line too long. Too many fittings or valves. Foot valve, strainers too small. NPSHA too low.	Increase inlet line size. Reduce length, minimize direction and size changes, reduce number of fittings.
		Raise liquid level in source tank to increase net inlet pressure.
		Increase net inlet pressure by raising or pressurizing source tank.
		Select larger pump size with lower net inlet pressure required.
	Fluid viscosity greater than expected.	Reduce pump speed and accept lower flow or change system to reduce line losses.
		Change temperature of product to reduce viscosity.
	Fluid temperature higher than expected (vapor pressure higher).	Reduce temperature, reduce speed and accept lower flow or change system to increase net inlet pressure available.
Noisy Operation	Cavitation	
	High fluid viscosity High vapor pressure fluid High temperature.	Slow down pump, reduce temperature, change system setup.
	NPSHA less than NPSHR.	Increase NPSHA or decrease NPSHR.
	Air or gas in fluid .	
	Leaks in the pump or piping.	Fix leaks.
	Dissolved gas or naturally aerated products.	Minimize discharge pressure (also see "Cavitation" above).
Noisy Operation Caused By Mechanical Problems	Rotor to Body Contact	
	Improper assembly of pump.	Check clearances and adjust shimming.
	Distortion of pump due to improper piping installation.	Change piping installation to eliminate piping stress and distortion on body.
	Pressures required higher than the pump is rated for.	Reduce discharge pressure required.
	Worn bearings.	Rebuild with new bearings and lubricate regularly.
	Rotor to Rotor Contact	
	Loose or incorrectly-timed gears.	Rebuild with new parts. Note: This will cause severe damage.
	Sheared keys.	Rebuild with new parts. Note: This will cause severe damage.
	Worn gear splines.	Rebuild with new parts. Note: This will cause severe damage.
	Drive noise caused by gear trains, chains, couplings or bearings.	Repair or replace drive parts. Check bearings for damage and replace as necessary.

Troubleshooting

Problem	Possible Cause	Suggested Action
Pump Requires Excessive Power (overheats, stalls, high current draw, breakers trip)	Higher than expected viscosity losses.	If within pump rating, increase drive size
	Higher than expected pressures.	Reduce pump speed. Increase line sizes.
	Fluid is colder with a higher viscosity than expected.	Heat fluid, insulate lines or heat trace lines.
	Fluid sets in line and pump during shutdown.	Increase line sizes.
		Insulate lines or heat trace lines.
		Install a "soft start" drive.
		Install a recirculating bypass system.
		Flush system with a nonsetting fluid.
	Fluid builds up on pump surfaces.	Replace the pump with more running clearances.
Short Pump Service Life	Pumping abrasives.	Larger pumps at slower speeds.
	Speeds and pressures higher than rated.	Reduce speeds and pressures by making changes in the system.
		Replace pump with a larger model with higher pressure ratings.
	Worn bearings and gears due to lack of lubrication.	Check and replace bearing and gears as necessary. Adjust lubrications schedule to decrease time between lubrication.
		Modify external wash down method to reduce water entering into gear case.
	Misalignment of drive and piping. (Excessive overhung load or misaligned couplings.)	Check alignment of piping and drive. Adjust as necessary.
Any Other Issue		Contact: Dixon Sanitary 800-789-1718

Parts List for JRZW-120 Wine Pump

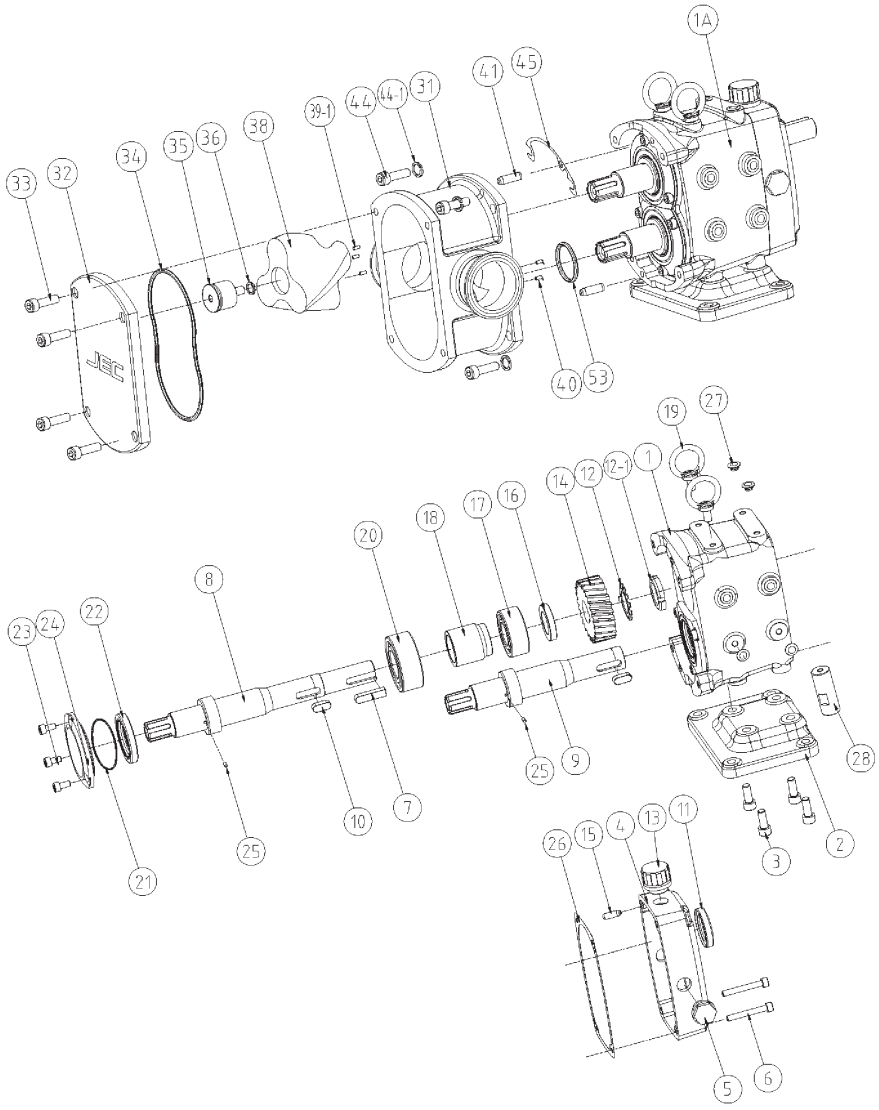

Repair Kits

Complete Replacement Seal Kits

Part #	Material	Description	Kit Includes
RZW-120-2E-KIT	EPDM	single mechanical seal repair kit TC/TC	Items 52, 52-1, 52-2, 53
RZW-120-2V-KIT	FKM	single mechanical seal repair kit TC/TC	Items 52, 52-1, 52-2, 53

Pump Elastomers Only

Part #	Material	Description	Kit Includes
RZW-120-2E-EK	EPDM	single mechanical seal EPDM elastomers	Items 34, 52-2, 53
RZW-120-2V-EK	FKM	single mechanical seal FKM elastomers	Items 34, 52-2, 53

Set of TC Seats

Part #	Description	Kit Includes
RZW-120-TC-SET	TC seal rings	Items 52, 52-1

Parts List for JRZW-120 Wine Pump

Item	Part #	Description	Material	Quantity Per Pump
1	RZW-120-GBCI	gear box	FCD40	1
2	RZW-120-GBCIB	base, gear box	FCD40	1
3	RZW-120-BWB	wrench bolt, base (M8x20L)	SUS304	4
4	RZW-120-GBCCI	cover, gear box	FCD40	1
5	RZW-120-PLD	plug, level, drain		3
6	RZW-120-GBWB	wrench bolt, gear box cover (M6x45L)	S45C	4
7	RZW-120-DSLEY	key, shaft (8x7x34)	S45C	1
8	RZW-120-DSSHAFT	shaft, drive	SUS304	1
9	RZW-120-IDSHAFT	shaft, idle	SUS304	1
10	RZW-120-GKEY	key, gear (8x7x21)	S45C	1
11	RZW-120-OSCB	oil seal, cover (23x43x7t)	NBR	1
	RZW-120-OSCV	oil seal, cover (23x43x7t)	FKM	1
12	RZW-120-TGWASH	lock washer	S45C	2
12-1	RZW-120-TGNUT	lock nut	S45C	2
13	RZW-120-RVLV	breather, gear box	PE	1
14	RZW-120-TGHELG	helical gear	S45C	1
15	RZW-120-GBDOW	dowel, gear box (Φ6)	SUS304	2
16	RZW-120-GSPAC	spacer, gear (Φ35x5L)	S45C	2
17	RZW-120-RBEAR	bearing, rear (#5205)		2
18	RZW-120-BSPAC	spacer, bearing	S45C	2
19	RZW-120-IBOLT	I-bolt / M8	SUS304	2
20	RZW-120-FBEAR	bearing, front (#5206)		2
21	RZW-120-OSGOV	O-ring, oil seal gland (AN035)	FKM	2
22	RZW-120-OSGB	Oil seal, gear box (38x55x9t)	NBR	2
	RZW-120-0SGV	Oil seal, gear box (38x55x9t)	FKM	2
23	RZW-120-OSGLD	wrench bolt, oil seal gland (M6x10L)	SUS304	6
24	RZW-120-OSGLD	gland, oil seal	SUS304	2
25	RZW-120-DSPIN	pin, double seal	SUS304	2
26	RZW-120-GCGP	gasket	Paper	2
27	RZW-120-PLUG	plug (M8)	PE	8
28	RZW-120-VADAPT	vertical adaptor	SUS304	4
1A	RZW-120-GBAW	gear box assembly - white	FCD40	1
31	RZW-120-RCCLMP	rotor case	SUS316L	4
32	RZW-120-FCVR	front cover	SUS316L	4
33	RZW-120-CNUT	wrench bolt, front cover	SUS304	4

Parts List for JRZW-120 Wine Pump

Item	Part #	Description	Material	Quantity Per Pump
34	RZW-120-FCOE	O-ring, front cover (AN251)	EPDM	1
	RZW-120-FCOV	O-ring, front cover (AN251)	FKM	1
35	RZW-120-RBEAR	rotor bolt	SUS316L	2
36	RZW-120-RBW	spring washer, rotor bolt	SUS304	2
38	RZW-120-RHELIA	rotor, heli-lobe	EPDM	2
39-1	RZW-120-RTSLP	seal pin, rotor	SUS304	6
40	RZW-120-CSSLP	seal pin, case	SUS304	4
41	RZW-120-RCDOW	dowel, rotor case (Φ6)	SUS304	2
44-1	RZW-120-WB	spring washer, wrench bolt	SUS304	4
45	RZW-120-SHIM05	shim, 0.05mm	SUS304	2
	RZW-120-SHIM1	shim, 0.1mm	SUS304	2
53	RZW-120-RCORE	O-ring, rotor case (AN220)	EPDM	2
	RZW-120-RCORV	O-ring, rotor case (AN220)	FKM	2

Parts List for JRZW-120 Wine Pump

Single Mechanical Seal

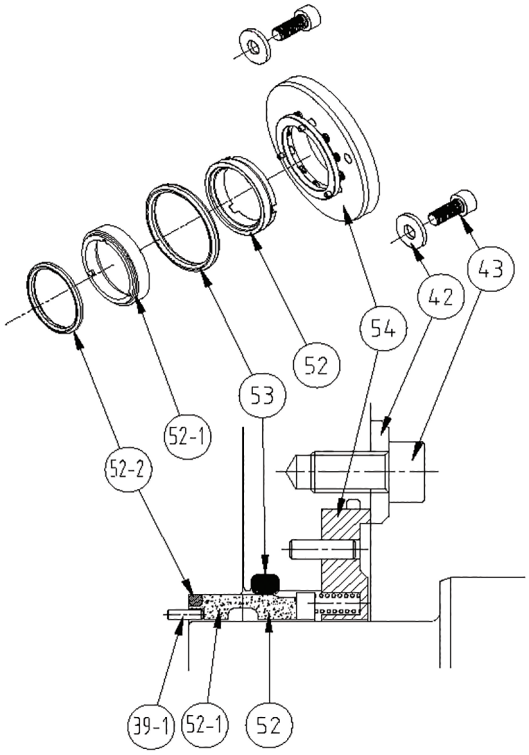

Item	Part #	Description	Material	Quantity Per Pump
42	RZW-120-MSGFW	flat washer, M/seal gland (Φ6)	SUS304	4
43	RZW-120-MSGWB	wrench bolt, M/seal gland (M6x10L)	SUS304	4
52-2	RZW-120-RTORE	O-ring, rotor (AN027)	EPDM	2
	RZW-120-RTORV	O-ring, rotor (AN027)	FKM	2
52-1	RZW-120-SRRTC	seal ring, rotating	TC	2
52	RZW-120-SRTC	seal ring	TC	2
53	RZW-120-RCORE	O-ring, rotor case (AN220)	EPDM	2
	RZW-120-RCORV	O-ring, rotor case (AN220)	FKM	2
54	RZW-120-CSSB	single seal body, case	SUS304	2
39-1	RZW-120-RTSLP	seal pin, rotor	SUS304	2

- All standard rotor case don't have tap holes for flushing and jackets

Parts List for JRZW-120 Wine Pump

Double Mechanical Seal

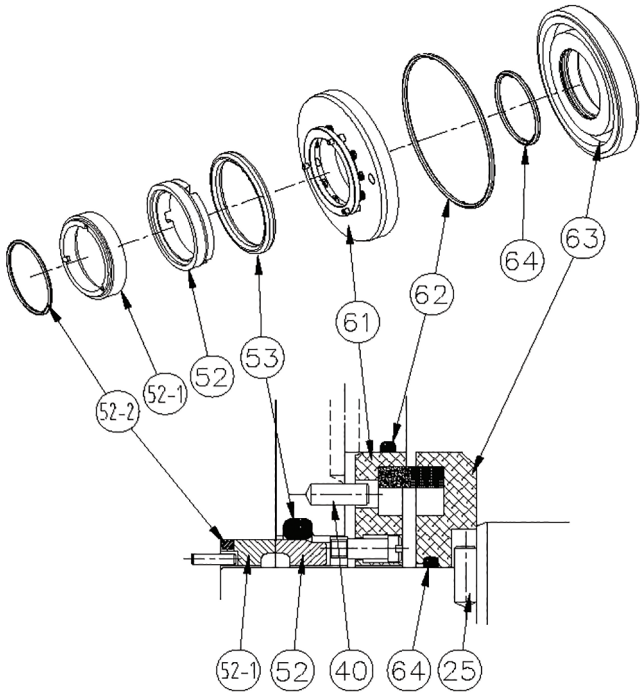

Item	Part #	Description	Material	Quantity Per Pump
52-2	RZW-120-RTORE	O-ring, rotor (AN027)	EPDM	2
	RZW-120-RTORV	O-ring, rotor (AN027)	FKM	2
52-1	RZW-120-SRRTC	seal ring, rotating	TC	2
52	RZW-120-SRTC	seal ring	TC	2
53	RZW-120-RCORE	O-ring, rotor case (AN220)	EPDM	2
	RZW-120-RCORV	O-ring, rotor case (AN220)	FKM	2
61	RZW-120-CDSBTC	double seal body, case	TC/SUS304	2
62	RZW-120-CORDSE	O-ring, case, double seal (AN036)	EPDM	2
	RZW-120-CORDSV	O-ring, case, double seal (AN036)	FKM	2
63	RZW-120-SDSBC	rotation part, double seal, shaft	Carbon/SUS304	2
	RZW-120-SDSB	rotation part, rouble seal, shaft	TC/SUS304	2
64	RZW-120-CORDSE	O-ring, shaft, double seal (AN023)	EPDM	2

Parts List for JRZW-120 Wine Pump

Single O-ring Seal

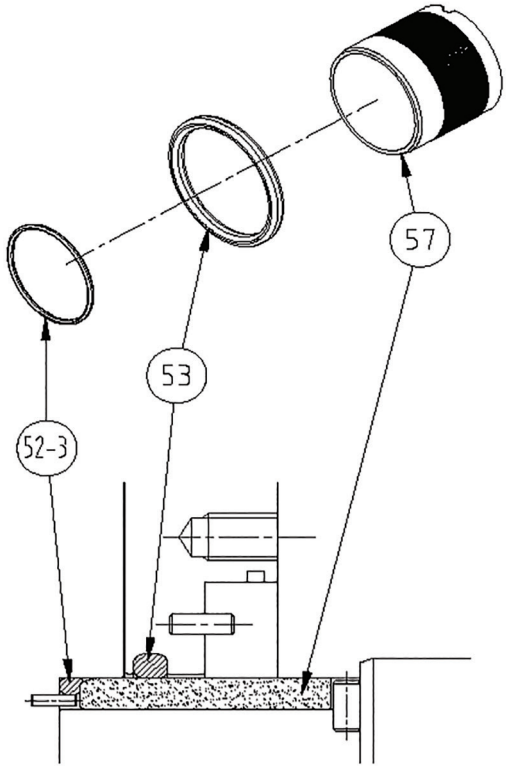

Item	Part #	Description	Material	Quantity Per Pump
52-3	RZW-120-SORE	O-ring, sleeve (AN217)	EPDM	2
	RZW-120-SORV	O-ring, sleeve (AN217)	FKM	2
53	RZW-120-RCORE	O-ring, rotor case (AN220)	EPDM	2
	RZW-120-RCORV	O-ring, rotor case (AN220)	FKM	2
57	RZW-120-CERCS	ceramic coated sleeve, product	Ceramic/SUS304	2

Parts List for JRZW-120 Wine Pump

Triple Lip Seal

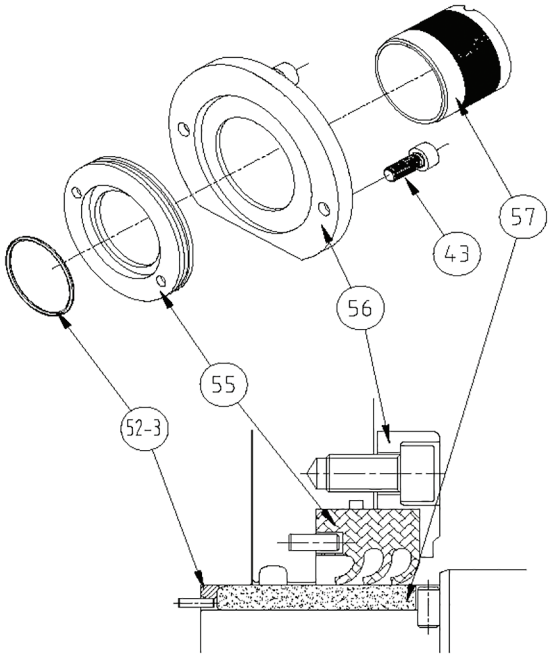

Item	Part #	Description	Material	Quantity Per Pump
52-3	RZW-120-SORE	O-ring, sleeve (AN217)	EPDM	2
	RZW-120-SORV	O-ring, sleeve (AN217)	FKM	2
55	RZW-120-TRPLSC	triple lip seal, product	PTFE+Glass	2
56	RZW-120-LSC	lip seal cover	SUS304	2
43	RZW-120-MSGWB	wrench bolt, M/seal gland (M6x10L)	SUS304	4
57	RZW-120-CERCS	ceramic coated sleeve, product	Ceramic/SUS304	2

Certificates

ATEX Certificate

JEC PUMPS

Konformitätserklärung
EC declaration of conformity

im Sinne der EG-Maschinenrichtlinie 98 / 37 / EG, Anhang IIA
as defined by EC machinery directive 98 / 37 / EC, Annex II A

Produkt: Product:	Kreiskolbenpumpe Rotary Lobe Pump
Modell: Serial No :	**JRZW120-031-06** JECP-0000
Max. Arbeitsdruck: max. working pressure:	**bis 6 bar** **to 6 bar**
Drehzahl: Speed:	**<500 min^{-1} (+/-10%)**
Kennzeichnung: Marking:	**II 2G c T4**

Hiermit erklären wir, dass die Pumpentypen, mit den folgenden Richtlinien übereinstimmen:
We declares that the pump types, complies with the following relevant regulations:

EG - Maschinenrichtlinie 98 / 37 / EG, Anhang I Nr.1
EC machinery directive 98 / 37 / EG, Annex I No. 1

EG - Richtlinie 94 / 9 / EC für Geräte in explosionsgefährdeten Bereichen
EC directive 94 / 9 / EC for equipment for the use in potentially explosive atmospheres

Entsprechend Artikel 8(1)b)ii) der Richtlinie 94/9/EG ist die technische Dokumentation bei der benannten Stelle hinterlegt:
IBExU, Institut für Sicherheitstechnik, Fuchsmühlenweg 7, 09599 Freiberg

According to article 8(1)b)ii) of guide line 94 / 9 / EC the technical documentation is deposited at the nominated location:
IBExU, Institute for Safety Technology, Fuchsmuehlenweg 7, 09599 Freiberg, Germany

Angewandte harmonisierte Normen:
Applicable harmonized standards:

EN 292-1, EN 292-2, EN 809, EN 294, EN 563, EN 953

EN1127-1, EN 13463-1, EN 13463-5

Die Sicherheitshinweise der Betriebsanleitung sind zu beachten!
The safety instructions of the operating manual must be followed!

July 28 2009
Date

James Song / President

JEC PUMPS

Qr 1935/2004 (EC) Declaration of Conformity

Manufacturer: JEC Ltd. 15-26,Beodeul-ro 1362, Hwaseong-SiGyeonggi-Do,South Korea
Products:Rotary pumps, centrifugalpumps and Blenders

We,JEC,hereby guarantee thatthe materials are directly contacted with food as below:

Wetted parts,Sealring, Triple Lip-seal and O-rings

Comply wth the following relevant regulations:
- 1935/2004 (EC)
- Annex IV of Regulation (EC) 10/2011
- BfR Reoommendation XXI
- 84/500/EEC

This declaration of conformity has been established on the basis of the followings:

No.	Parts	Testrequested	Test done
1	Wetted parts /SS316L	German Food,Articles of Daily use and Feed code of September 1,2005 (LFGB),Section30	Extractable heavy metals
		German Food,Articles of Daily use and Feed code of September 1,2005 (LFGB),Section31	Sensorialexamination odor and taste
2	Seal ring /SIC	German Food,Articles of Daily use and Feed code of September 1,2005 (LFGB),Section30	Extractable heavy metals
		German Food,Articles of Daily use and Feed code of September 1,2005 (LFGB),Section31	Sensorial examination odor and taste
3	Seal ring / carbon	European commission Directive 84/500/EEC	Extractable Lead&cadmium
4	Lip seal /Glass filled PTFE	commission Regulation (EC) No 10/2011 and Hence Article 3 of European Regulation No. 1935/2004	1. Overall Migration 2. Specific Migration of Heavy metal
		German Food,Articles of Daily use and Feed code of September 1,2005 (LFGB),Section31	Sensorialexamination odor and taste
5	O-ring /EPDM & FPM	BfR Recommendation XXI	1. Overall Migration 2. Specific migration of Primary Aromatic Amine 3. Lead and Zinc content 4. Specific migration of Formaledehyde 5. Organotin content
		European commission Directive 93/1 EEC	Specific migration of Nitrosamines

JEC LTD. 15-26 ,Beodeul-ro,Paltan-myun,Hwaseong-si,Gyeonggi-do,445-
Tel :82-31-355-0316,Fax :82-31-355-0319

JEC PUMPS

CE-Declaration of conformity
(as per EC's Machinery Directive 2006/42/EC, Annex IIA)

Manufacturer
JEC LTD
15-26, Beodeul-ro 1362, Hwasung-Shi,
Kyunggi-do, South Korea

We hereby guarantee that **Rotary lobe pump (Pump Head Only)**
Type: **JRZW120-031-06**

are in conformity with the essential requirements of the EC's Machinery Directive 2006/42/CE(latest modifications included) and according the following Council Directives and harmonized norms:
- **2006/95/EC Directive "low voltage"**
- **UNI EN ISO 12100-2:2005**

Manufacturer Declaration
(as per EC's Machinery Directive 2006/42/CE, Annex IIB)

We hereby declares that the above pumps,
Comply with the pertinent disposition, in the execution supplied by JEC LTD for the incorporation in a machine or installation, or for the assembly with other machines as a subunit of other higher order machine. Harmonized norms used, particularly:

UNI EN ISO 12100-2:2005

The machine above must not be put into service until the machinery into which it has been incorporated have been declared in conformity with the EC Machinery Directive. It must meet, particularly, the standards ISO 23857:2008, ISO 13732-1:2007 in its respective current editions.

March 21, 2014 in Korea

James Song / President

JEC LTD. 15-26 , Beodeul-ro, Paltan-myun, Hwaseong-si, Gyeonggi-do, 445-843, South Korea
Tel : 82-31-355-0316, Fax : 82-31-355-0319

Notes

Limited Warranty

DIXON VALVE AND COUPLING COMPANY, LLC (herein called "Dixon") warrants the products described herein, and manufactured by Dixon to be free from defects in material and workmanship for a period of one (1) year from date of shipment by Dixon under normal use and service. It's sole obligation under this warranty being limited to repairing or replacing, as hereinafter provided, at its option any product found to Dixon's satisfaction to be defective upon examination by it, provided that such product shall be returned for inspection to Dixon's factory within three (3) months after discovery of the defect. The repair or replacement of defective products will be made without charge for parts or labor. This warranty shall not apply to: (a) parts or products not manufactured by Dixon, the warranty of such items being limited to the actual warranty extended to Dixon by its supplier; (b) any product that has been subject to abuse, negligence, accident, or misapplication; (c) any product altered or repaired by others than Dixon; and (d) to normal maintenance services and the replacement of service items (such as washers, gaskets and lubricants) made in connection with such services. To the extent permitted by law, this limited warranty shall extend only to the buyer and any other person reasonably expected to use or consume the goods who is injured in person by any breach of the warranty. No action may be brought against Dixon for an alleged breach of warranty unless such action is instituted within one (1) year from the date the cause of action accrues. This limited warranty shall be construed and enforced to the fullest extent allowable by applicable law.

Other than the obligation of Dixon set forth herein, Dixon disclaims all warranties, express or implied, including but not limited to any implied warranties of merchantability or fitness for a particular purpose, and any other obligation or liability. The foregoing constitutes Dixon's sole obligation with respect to damages, whether direct, incidental or consequential, resulting from the use or performance of the product.

Some products and sizes may be discontinued when stock is depleted, or may require a minimum quantity for ordering.

NOTE: Reasonable care has been taken in preparing this catalog. Dixon Sanitary, a division of Dixon Valve & Coupling Company, LLC reserves the right to make corrections and any dimensional changes.

Dixon®, founded in 1916, is a premier manufacturer and supplier of hose couplings, valves, dry-disconnects, swivels, and other fluid transfer and control products. The company's global reach includes a wide range of products for numerous industries including petroleum exploration, refining, transportation, chemical processing, food & beverage, steel, fire protection, construction, mining and manufacturing. Dixon®'s strategic objective is to create solutions that make products safer, leak-free, longer lasting, and always available.

Dixon, founded in 1916, is a premier manufacturer and supplier of hose couplings, valves, dry-disconnects, swivels, and other fluid transfer and control products. The company's global reach includes a wide range of products for numerous industries including petroleum exploration, refining, transportation, chemical processing, food & beverage, steel, fire protection, construction, mining and manufacturing. Dixon's strategic objective is to create solutions that make products safer, leak-free, longer lasting, and always available.

The Right Connection®

Dixon Sanitary

N25 W23040 Paul Road • Pewaukee, WI 53072
Customer Service: 800.789.1718
sanitarysales@dixonvalve.com
Fax: 800.789.4046
dixonvalve.com

connect with us on

© 2019 DVCC